Technical Safety Authority of Saskatchewan

2202 2nd Avenue
Regina, SK S4R 1K3 Canada
1 (866) 530-8599
info@tsask.ca
www.tsask.ca

REGISTRATION OF A PRESSURE FITTING DESIGN

11-May-21

TSSA
345 Carlingview Drive
Toronto, Ontario
M9W 6N9

Attention: Cecylia Garbacz **File Number: 12030 [0 F]**

Re: Manufacturer: Parker Hannifin Corporation - Instrumentation Products Div.
Item: Needle Valves
Catalog or Drawing: Per Scope of Registration & Catalog 4110-NV (May 2019)

TSASK Codes and Standards Compliance has registered the design listed above in accordance with The Boiler and Pressure Vessel Act and Regulations and CSA B51. The Canadian Registration Number (CRN) is:

OC6261.53 **Expiry Date: December 21, 2030**

Please note that every fitting shall be constructed in strict accordance with the registered design.

Fitting registrations are required to be resubmitted for validation after ten (10) years from the registration date in accordance with CSA B51, Clause 4.2.1.

Should you require anything further, please do not hesitate to contact the Codes and Standards Compliance Office at your convenience.

Yours truly,

Athan Syrgiannis, P.Eng.
Codes and Standards Compliance

Remarks:
A valid quality control program must be maintained at the production facility for the fitting registration to remain valid until the expiry date.

The scope of this registration includes the 10-year renewal (previously registered in Saskatchewan through CSA).

Technical Standards and Safety Authority
345 Carlingview Drive
Toronto, Ontario M9W 6N9
www.tssa.org

Show facsimile of manufacturer's logo or trademark, as it will appear on the fitting, in the space below

P

STATUTORY DECLARATION
Registration of Fittings

I, Craig Beckwith, Division General Manager
(Name and Position, e.g. President, Plant Manager, Chief Engineer)

of Parker Hannifin Corporation, Instrumentation Products Division
(Name of Manufacturer)

Located at 1005 A Cleaner Way, Huntsville, Alabama, USA 35805 256-881-2040
(Plant Address) *(Telephone No.)* *(Fax No.)*

☐ do solemnly declare that the fittings listed hereunder, which are subject to the ***Technical Standards and Safety Act***, Boilers and Pressure Vessels Regulation, comply with all of the requirements of

_____
(Title of recognized North American Standard)

which specifies the dimensions, materials of construction, pressure/temperature ratings, identification marking the fittings and service;

☑ or are not covered by the provisions of a recognized North American standard and are therefore manufactured to comply with MSS-SP-99 as supported by the attached data which identifies the dimensions, material of construction, pressure/temperature ratings and the basis for such ratings, the marking of the fitting for identification and service.

I further declare that the manufacture of these fittings is controlled by a quality system meeting the requirements of ISO 9001:2015 which has been verified by the following authority, DNV-GL.
The items covered by this declaration, for which I seek registration, are category C type fittings. In support of this application, the following information and/or test data are attached as follows:
Scope of Registration with Attachments renewal of CRN 0C6261.5
(drawings, calculations, test reports, etc.)

Declared before me at Huntsville **in the** State **of** Alabama

the 3rd **day of** June **AD 2020**.

Commissioner for Oaths:

Sheri Coggan
(Printed name)

Sheri Coggan
(Signature)

(Signature of Declarer)

FOR OFFICE USE ONLY

To the best of my knowledge and belief, the application meets the requirements of the ***Technical Standards and Safety Act***, Boilers and Pressure Vessels Regulation, and CSA Standard B51 and is accepted for registration in Category _____.

CRN: _____

Registered by: _____

Dated: _____

Technical Safety Authority of Saskatchewan
Registration No. OC6261.53
File No. 12030
Registered
Date: May 11, 2021
Expiry Date: December 21, 2030
Codes & Standards Compliance Office

NOTE: This registration expires on: _____

**Information provided in this application is releasable under the Freedom of Information and Privacy Protection Act and may be disclosed upon request.*

BV 09553 (04/17)

Registration Scope

Parker Hannifin
Instrumentation Products Division

Catalog 4110-NV May 2019, Pages 2-7
V Series Needle Valves

Based on the below summary we seek registration for the attached scope.

Series/Model	Size	Shell Pressure Rating, CWP	Body Material	Packing	Test Ref.
V Series	1/8”	5000 psi	ASTM A 182 Type F316	PTFE	Dec 1, Line 4
V Series	1/4”	5000 psi	ASTM A 182 Type F316	PTFE	Dec 1, Line 2
V Series	3/8”	5000 psi	ASTM A 182 Type F316	PTFE	Dec 1, Line 6
V Series	1/2”	5000 psi	ASTM A 182 Type F316	PTFE	Dec 2, Line 1
V Series	1/8”	3000 psi	ASTM B 283, Alloy C37700	PTFE	Dec 2, Line 5
V Series	1/4”	3000 psi	ASTM B 283, Alloy C37700	PTFE	Dec 2, Line 6
V Series	3/8”	3000 psi	ASTM B 283, Alloy C37700	PTFE	Dec 1, Line 5
V Series	1/2”	3000 psi	ASTM B 283, Alloy C37700	PTFE	Dec 1, Line 7

Specifications

Pressure Ratings:
316 Stainless Steel: 5000 psig (345 bar) CWP
Brass
3000 psig (207 bar) CWP
Orifice: 0.078" to 0.312" (2.0mm to 7.9mm)
C_V: 0.12 to 1.90
Port size: 1/8" to 3/4" (3mm to 12mm)
Temperature Ratings:
Stainless Steel
-65°F to 450°F (-54°C to 232°C)
Brass: -65°F to 400°F (-54°C to 204°C)
PTFE Packing:
-65°F to 450°F (-54°C to 232°C)
PCTFE Stem Tip:
-65°F to 350°F (-54°C to 177°C)
Nitrile Rubber Stem Seal:
-30°F to 250°F (-34°C to 121°C)
Fluorocarbon Rubber Stem Seal:
-15°F to 400°F (-26°C to 204°C)
Ethylene Propylene Rubber Stem Seal:
-70°F to 275°F (-57°C to 135°C)

Note: When combining body, seat and seal materials, the most restrictive temperature rating becomes the limiting factor on temperature range.

Technical Safety Authority of Saskatchewan
Registration No. OC6261.53
File No. 12030
Registered
Date: May 11, 2021
Expiry Date: December 21, 2030
Codes & Standards Compliance Office

Pressure vs. Temperature

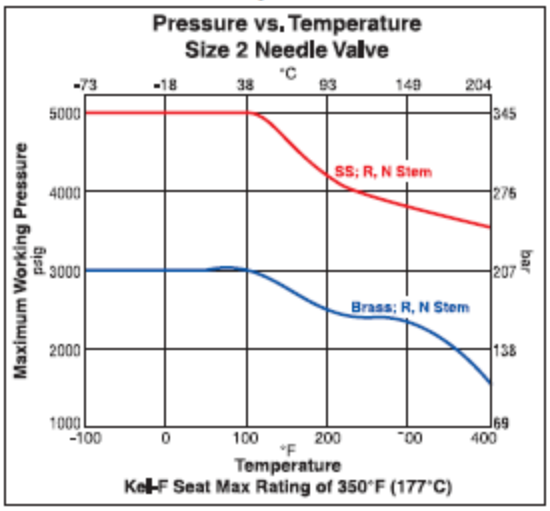

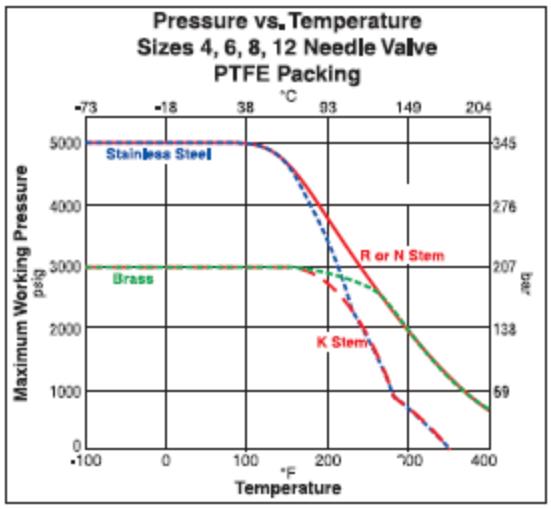

Note: To determine MPa, multiply bar by 0.1

Materials of Construction (with PTFE Packing)

Item #	Part Description	Stainless Steel	Brass
1	Body	ASTM A 182 Type F316	ASTM B 283 Alloy C37700
2	Packing Nut	ASTM A 479 Type 316	ASTM A 479 Type 316
3	Handle*	Nylon 6/6 with SS insert	Nylon 6/6 with SS insert
4	Lower Packing Washer	ASTM A 479 Type 316	ASTM A 479 Type 316
5	Handle Screw	Stainless Steel	Stainless Steel
6	Packing**	PTFE	PTFE
7	Stem (R and N Stem)	ASTM A 276 Type 316	ASTM A 276 Type 316
7A	Stem (K Stem)	ASTM A 276 Type 316, with PCTFE	ASTM A 276 Type 316, with PCTFE
8	Upper Packing Washer	Brass	Brass
9	Panel Nut***	316 Stainless Steel	316 Stainless Steel

* Handles for V8 and V12 Series Valves with R and N Stems are aluminum T-bars.
** Optional O-ring elastomeric stem seals are available – See How to Order.
*** Panel Nut is nickel plated brass on V2 Series Valves. Panel Nuts must be ordered separately – See page 7.
Lubrication: Perfluorinated Polyether

Dimensions / Flow Data

Basic Part Number		End Connections		Stem Type	Flow Data						Dimensions A† and B†
		Inlet (Port 1)	Outlet (Port 2)		Orifice		Inline		Angle		
Inline	Angle				Inch	mm	C_V	X_T*	C_V	X_T*	Inch (mm)
2A-V2LR-SS	2A-V2AR-SS	1/8" Compression A-LOK®		Blunt	0.078	2.0	0.12	0.78	0.14	0.67	1.01 (25.7)
2A-V2LN-SS	2A-V2AN-SS			Needle			0.12	0.80	0.14	0.63	
2A-V2LK-SS	2A-V2AK-SS			PCTFE			0.13	0.83	0.14	0.63	
2F-V2LR-SS	2F-V2AR-SS	1/8" Female NPT		Blunt	0.093	2.4	0.13	0.61	0.16	0.49	0.94 (23.9)
2F-V2LN-SS	2F-V2AN-SS			Needle			0.12	0.66	0.18	0.39	
2F-V2LK-SS	2F-V2AK-SS			PCTFE			0.12	0.73	0.17	0.54	
2M-V2LR-SS	2M-V2AR-SS	1/8" Male NPT		Blunt	0.093	2.4	0.13	0.61	0.16	0.49	0.75 (19.1)
2M-V2LN-SS	2M-V2AN-SS			Needle			0.12	0.66	0.18	0.39	
2M-V2LK-SS	2M-V2AK-SS			PCTFE			0.12	0.73	0.17	0.54	
2Z-V2LR-SS	2Z-V2AR-SS	1/8" Compression CPI™		Blunt	0.078	2.0	0.12	0.78	0.14	0.67	1.01 (25.7)
2Z-V2LN-SS	2Z-V2AN-SS			Needle			0.12	0.80	0.14	0.63	
2Z-V2LK-SS	2Z-V2AK-SS			PCTFE			0.13	0.83	0.14	0.63	
2F-V4LR-SS	2F-V4AR-SS	1/8" Female NPT		Blunt	0.176	4.5	0.43	0.77	0.55	0.63	0.81 (20.6)
2F-V4LN-SS	2F-V4AN-SS			Needle			0.43	0.69	0.55	0.63	
2F-V4LK-SS	2F-V4AK-SS			PCTFE			0.45	0.55	0.58	0.68	
4A-V4LR-SS	4A-V4AR-SS	1/4" Compression A-LOK®		Blunt	0.176	4.5	0.43	0.85	0.55	0.63	1.15 (29.2)
4A-V4LN-SS	4A-V4AN-SS			Needle			0.43	0.77	0.55	0.63	
4A-V4LK-SS	4A-V4AK-SS			PCTFE			0.45	0.69	0.58	0.68	
4M-V4LR-SS	4M-V4AR-SS	1/4" Male NPT		Blunt	0.176	4.5	0.43	0.85	0.55	0.63	0.94 (23.9)
4M-V4LN-SS	4M-V4AN-SS			Needle			0.43	0.77	0.55	0.63	
4M-V4LK-SS	4M-V4AK-SS			PCTFE			0.45	0.69	0.58	0.68	
4Z-V4LR-SS	4Z-V4AR-SS	1/4" Compression CPI™		Blunt	0.176	4.5	0.43	0.85	0.55	0.63	1.15 (29.2)
4Z-V4LN-SS	4Z-V4AN-SS			Needle			0.43	0.77	0.55	0.63	
4Z-V4LK-SS	4Z-V4AK-SS			PCTFE			0.45	0.69	0.58	0.68	
M6A-V4LR-SS	M6A-V4AR-SS	6mm Compression A-LOK®		Blunt	0.156	4.0	0.37	0.78	0.48	0.60	1.15 (29.2)
M6A-V4LN-SS	M6A-V4AN-SS			Needle			0.37	0.72	0.48	0.58	
M6A-V4LK-SS	M6A-V4AK-SS			PCTFE			0.39	0.62	0.51	0.64	
M6Z-V4LR-SS	M6Z-V4AR-SS	6mm Compression CPI™		Blunt	0.156	4.0	0.37	0.78	0.48	0.60	1.15 (29.2)
M6Z-V4LN-SS	M6Z-V4AN-SS			Needle			0.37	0.72	0.48	0.58	
M6Z-V4LK-SS	M6Z-V4AK-SS			PCTFE			0.39	0.62	0.51	0.64	
4F-V6LR-SS	4F-V6AR-SS	1/4" Female NPT		Blunt	0.228	5.8	0.73	0.90	1.23	0.50	0.94 (23.9)
4F-V6LN-SS	4F-V6AN-SS			Needle			0.55	0.61	0.92	0.62	
4F-V6LK-SS	4F-V6AK-SS			PCTFE			0.80	0.87	1.23	0.56	
6A-V6LR-SS	6A-V6AR-SS	3/8" Compression A-LOK®		Blunt	0.228	5.8	0.73	0.90	1.23	0.50	1.29 (32.8)
6A-V6LN-SS	6A-V6AN-SS			Needle			0.55	0.61	0.92	0.62	
6A-V6LK-SS	6A-V6AK-SS			PCTFE			0.80	0.87	1.23	0.56	
6M-V6LR-SS	6M-V6AR-SS	3/8" Male NPT		Blunt	0.228	5.8	0.73	0.90	1.23	0.50	1.03 (26.2)
6M-V6LN-SS	6M-V6AN-SS			Needle			0.55	0.61	0.92	0.62	
6M-V6LK-SS	6M-V6AK-SS			PCTFE			0.80	0.87	1.23	0.56	
6Z-V6LR-SS	6Z-V6AR-SS	3/8" Compression CPI™		Blunt	0.228	5.8	0.73	0.90	1.23	0.50	1.29 (32.8)
6Z-V6LN-SS	6Z-V6AN-SS			Needle			0.55	0.61	0.92	0.62	
6Z-V6LK-SS	6Z-V6AK-SS			PCTFE			0.80	0.87	1.23	0.56	
M10A-V6LR-SS	M10A-V6AR-SS	10mm Compression A-LOK®		Blunt	0.228	5.8	0.73	0.90	1.23	0.50	1.30 (33.0)
M10A-V6LN-SS	M10A-V6AN-SS			Needle			0.55	0.61	0.92	0.62	
M10A-V6LK-SS	M10A-V6AK-SS			PCTFE			0.80	0.87	1.23	0.56	
M10Z-V6LR-SS	M10Z-V6AR-SS	10mm Compression CPI™		Blunt	0.228	5.8	0.73	0.90	1.23	0.50	1.30 (33.0)
M10Z-V6LN-SS	M10Z-V6AN-SS			Needle			0.55	0.61	0.92	0.62	
M10Z-V6LK-SS	M10Z-V6AK-SS			PCTFE			0.80	0.87	1.23	0.56	

* Tested in accordance with ISA S75.02. Gas flow will be choked when $P_1 - P_2 / P_1 = x_T$.
† For CPI™ and A-LOK®, dimensions are measured with nuts in the finger tight position.

( ) Denotes dimensions in millimeters

Dimensions in inches/millimeters are for reference only, subject to change.

Parker Hannifin
Instrumentation Products Division

Catalog 4110-NV May 2019, Pages 12-15
VQ Series Toggle Valves

Based on the below summary we seek registration for the attached scope.

Series/Model	Size	Shell Pressure Rating, CWP	Body Material	Cap Material	Test Ref
VQ Series / Manual	1/4”	300 psi	ASTM A 182 Type F316	ASTM A 479 Type 316	Dec 2, Line 4
VQ Series / Manual	3/8”	300 psi	ASTM A 182 Type F316	ASTM A 479 Type 316	Dec 1, Line 3

Toggle Valve Specifications

Pressure Rating at All Temperatures:

Manual	300 psig (21 bar) CWP
Actuated N.C. V4Q	600 psig (41 bar) CWP
Actuated N.C. V6Q	500 psig (35 bar) CWP
Actuated N.O & D.A.	450 psig (31 bar) CWP

Temperature Ratings:

PTFE Stem Tip: -20°F to 200°F (-29°C to 93°C)
PCTFE Stem Tip: -65°F to 200°F (-54°C to 93°C)

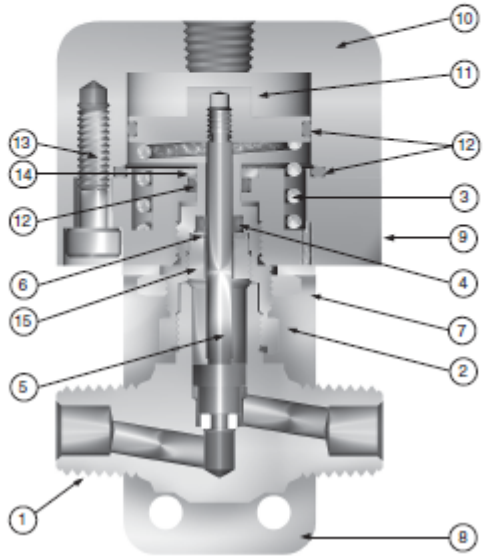

Materials of Construction

Item #	Description	Stainless Steel
1	Body	ASTM A 182 Type F316
2	Cap	ASTM A 479 Type 316
3	Spring*	Stainless Steel
4	Stem Seal**	Fluorocarbon Rubber
5	Stem	ASTM A 276 Type 316
6	Stem Washer	Stainless Steel
7	Panel/Lock Nut	316 Stainless Steel
8	Mounting Bracket	Aluminum
9	Actuator Base	Aluminum
10	Actuator Cap	Aluminum
11	Piston	Aluminum
12	Actuator Seals	Fluorocarbon Rubber
13	Screws	Stainless Steel
14	Actuator Bushing	Aluminum
15	Stem Bushing***	ASTM A 479 Type 316
16	Handle	Nylon 6/6
17	Handle Pin	Stainless Steel
18	Handle Washer	Acetal

* Spring not used on Double Acting (11AD) models
** Optional stem seal materials available - See How to Order
*** Stem Bushing not used on Normally Closed (11AC) models
Lubrication: Perfluorinated polyether

Minimum Actuating Pressures

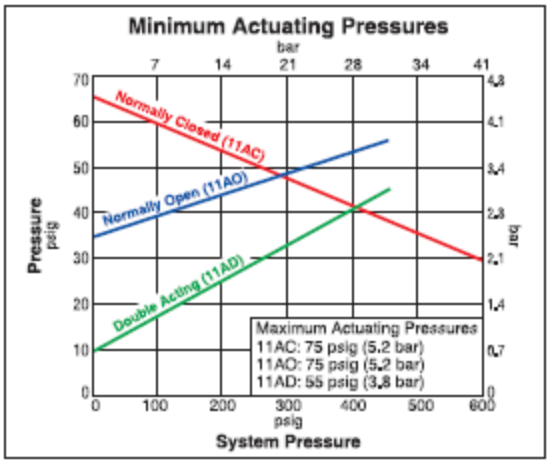

Dimensions / Flow Data

Basic Part Number	End Connections		Flow Data				Dimensions	Additional Options			
	Inlet (Port 1)	Outlet (Port 2)	Orifice Inch	Orifice mm	C_V	X_T*	A† and B† Inch (mm)	Stem Tip	Stem Seal	Actuation	Body Material
2A-V4LQ-SSP	1/8" Compression A-LOK®		0.078	2.0	0.14	0.52	1.10 (27.9)	K = PCTFE	BN = Nitrile Rubber	11AC = Normally Closed	BP = Brass with Panel Nut
2A-V4AQ-SSP					0.15	0.50					
2F-V4LQ-SSP	1/8" Female NPT		0.176	4.5	0.36	0.71	0.8 (20.6)		EPR = Ethylene Propylene Rubber	11AO = Normally Opened	
2F-V4AQ-SSP					0.49	0.64					
2M-V4LQ-SSP	1/8" Male NPT		0.125	3.2	0.30	0.50	0.81 (20.6)				
2M-V4AQ-SSP					0.35	0.55					
2Z-V4LQ-SSP	1/8" Compression CPI™		0.078	2.0	0.14	0.52	1.10 (27.9)				
2Z-V4AQ-SSP					0.15	0.50					
4A-V4LQ-SSP	1/4" Compression A-LOK®		0.176	4.5	0.36	0.71	1.15 (29.2)		KZ = Highly Fluorinated Fluocarbon Rubber	11AD = Double Acting	
4A-V4AQ-SSP					0.49	0.64					
4M-V4LQ-SSP	1/4" Male NPT		0.176	4.5	0.36	0.71	0.94 (23.9)				
4M-V4AQ-SSP					0.49	0.64					
4Z-V4LQ-SSP	1/4" Compression CPI™		0.176	4.5	0.36	0.71	1.15 (29.2)				
4Z-V4AQ-SSP					0.49	0.64					
M6A-V4LQ-SSP	6mm Compression A-LOK®		0.176	4.5	0.36	0.71	1.13 (28.7)				
M6A-V4AQ-SSP					0.49	0.64					
M6Z-V4LQ-SSP	6mm Compression CPI™		0.176	4.5	0.36	0.71	1.13 (28.7)				
M6Z-V4AQ-SSP					0.49	0.64					
M8A-V4LQ-SSP	8mm Compression A-LOK®		0.176	4.5	0.36	0.71	1.13 (28.7)				
M8A-V4AQ-SSP					0.49	0.64					
M8Z-V4LQ-SSP	8mm Compression CPI™		0.176	4.5	0.36	0.71	1.13 (28.7)				
M8Z-V4AQ-SSP					0.49	0.64					
4F-V6LQ-SSP	1/4" Female NPT		0.250	6.4	0.83	0.70	1.00 (25.4)	K = PCTFE	BN = Nitrile Rubber	11AC = Normally Closed	BP = Brass with Panel Nut
4F-V6AQ-SSP					0.92	0.68					
6A-V6LQ-SSP	3/8" Compression A-LOK®		0.250	6.4	0.83	0.70	1.29 (32.8)		EPR = Ethylene Propylene Rubber	11AO = Normally Opened	
6A-V6AQ-SSP					0.92	0.68					
6Z-V6LQ-SSP	3/8" Compression CPI™		0.250	6.4	0.83	0.70	1.29 (32.8)				
6Z-V6AQ-SSP					0.92	0.68					
8A-V6LQ-SSP	1/2" Compression A-LOK®		0.250	6.4	0.83	0.70	1.37 (34.8)				
8A-V6AQ-SSP					0.92	0.68					
8Z-V6LQ-SSP	1/2" Compression CPI™		0.250	6.4	0.83	0.70	1.37 (34.8)		KZ = Highly Fluorinated Fluocarbon Rubber	11AD = Double Acting	
8Z-V6AQ-SSP					0.92	0.68					
M10A-V6LQ-SSP	10mm Compression A-LOK®		0.250	6.4	0.83	0.70	1.30 (33.0				
M10A-V6AQ-SSP					0.92	0.68					
M10Z-V6LQ-SSP	10mm Compression CPI™		0.250	6.4	0.83	0.70	1.30 (33.0)				
M10Z-V6AQ-SSP					0.92	0.68					

* Tested in accordance with ISA S75.02. Gas flow will be choked when $P_1 - P_2 / P_1 = X_T$.
† For CPI™ and A-LOK®, dimensions are measured with nuts in the finger tight position.

Dimensions in inches/millimeters are for reference only, subject to change.

Parker Hannifin
Instrumentation Products Division

Catalog 4110-NV May 2019, Pages 16-18
NP6 Series Needle Valves

Based on the below summary we seek registration for the attached scope .

Series/Model	Size	Shell Pressure Rating, CWP	Body Material	Test Ref
NP6 Series	3/8”	6000 psi	ASTM A 182 Type F316	Dec 1, Line 1

Specifications

Pressure Rating:
6000 psig (414 bar) CWP

Temperature Rating:

PTFE Packing:
-65°F to 450°F (-54°C to 232°C)

PCTFE:
-65°F to 350°F (-54°C to 177°C)

Nitrile Rubber:
-30°F to 250°F (-34°C to 121°C)

Ethylene Propylene Rubber:
-70°F to 275°F (-57°C to 135°C)

Fluorocarbon Rubber:
-15°F to 400°F (-26°C to 204°C)

Grafoil®:
-70°F to 700°F (-57°C to 371°C)

Materials of Construction

Item #	Description	Material
1	Body	ASTM A 182 Type F316
2	Packing Nut	ASTM A 479 Type 316
3	Lower Stem (R-Stem)	ASTM A 276 Type 316
3	Lower Stem (K-Stem)	ASTM A 276 Type 316, with PCTFE
4	Upper Stem	ASTM A 276 Type 316
5	Packing Gland	ASTM A 276 Type 316
6	Packing*	PTFE
7	Packing Washer	Stainless Steel
8	Handle**	Nylon 6/6, with SS Insert
9	Handle Screw	Stainless Steel
10	Packing Nut Screw	Stainless Steel
11	Dust Seal	Fluorocarbon Rubber
12	Panel Nut	316 Stainless Steel

* Optional elastomeric stem seals and Grafoil® packing are available - See How to Order.
** Handles for Grafoil® packed valves are aluminum T-bars.
Lubrication: Perfluorinated polyether

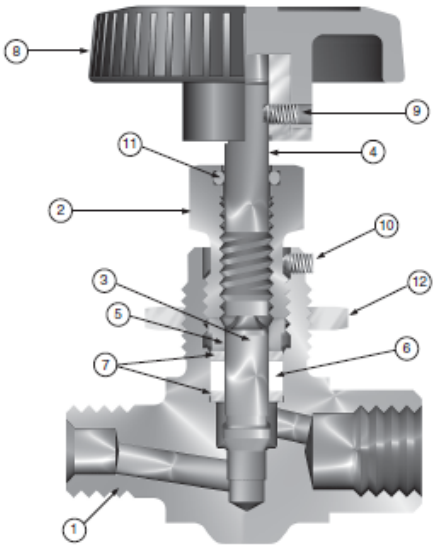

Pressure vs. Temperature

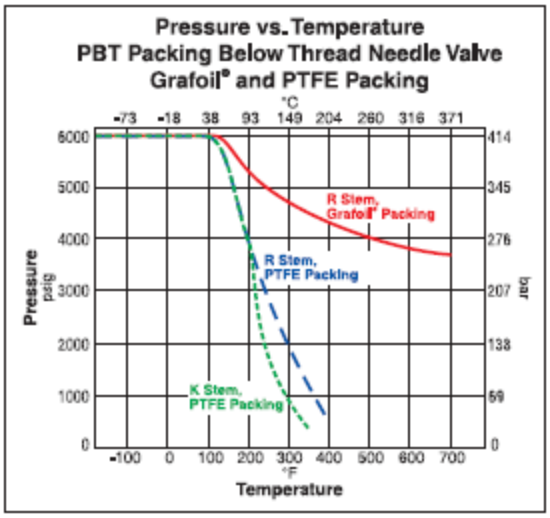

Note: To determine MPa, multiply bar by 0.1

Flow Characteristics

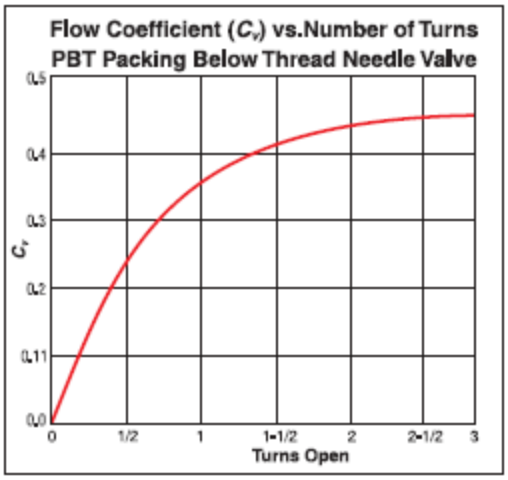

Note: When combining seat and seal materials, the most restrictive temperature rating becomes the limiting factor on temperature range.

Basic Part Number		End Connections		Stem Type	Flow Data						Dimensions
					Orifice		Inline		Angle		A† and B†
Inline	Angle	Inlet (Port 1)	Outlet (Port 2)		Inch	mm	C_V	X_T*	C_V	X_T*	Inch mm
4A-NP6LR-SSP	4A-NP6AR-SSP	1/4" Compression A-LOK®		Blunt	0.177	4.5	0.60	0.50	0.67	0.39	1.20
4A-NP6LK-SSP	4A-NP6AK-SSP			PCTFE			0.51	0.55	0.65	0.52	(30.5)
4F-NP6LR-SSP	4F-NP6AR-SSP	1/4" Female NPT		Blunt	0.177	4.5	0.60	0.50	0.67	0.39	1.00
4F-NP6LK-SSP	4F-NP6AK-SSP			PCTFE			0.51	0.55	0.65	0.52	(25.4)
4M-NP6LR-SSP	4M-NP6AR-SSP	1/4" Male NPT		Blunt	0.177	4.5	0.60	0.50	0.67	0.39	1.03
4M-NP6LK-SSP	4M-NP6AK-SSP			PCTFE			0.51	0.55	0.65	0.52	(26.2)
4Z-NP6LR-SSP	4Z-NP6AR-SSP	1/4" Compression CPI™		Blunt	0.177	4.5	0.60	0.50	0.67	0.39	1.20
4Z-NP6LK-SSP	4Z-NP6AK-SSP			PCTFE			0.51	0.55	0.65	0.52	(30.5)
6A-NP6LR-SSP	6A-NP6AR-SSP	3/8" Compression A-LOK®		Blunt	0.177	4.5	0.60	0.50	0.67	0.39	1.23
6A-NP6LK-SSP	6A-NP6AK-SSP			PCTFE			0.51	0.55	0.65	0.52	(31.2)
6Z-NP6LR-SSP	6Z-NP6AR-SSP	3/8" Compression CPI™		Blunt	0.177	4.5	0.60	0.50	0.67	0.39	1.23
6Z-NP6LK-SSP	6Z-NP6AK-SSP			PCTFE			0.51	0.55	0.65	0.52	(31.2)
M6A-NP6LR-SSP	M6A-NP6AR-SSP	6mm Compression A-LOK®		Blunt	0.177	4.5	0.60	0.50	0.67	0.39	1.16
M6A-NP6LK-SSP	M6A-NP6AK-SSP			PCTFE			0.51	0.55	0.65	0.52	(29.5)
M6Z-NP6LR-SSP	M6Z-NP6AR-SSP	6mm Compression CPI™		Blunt	0.177	4.5	0.60	0.50	0.67	0.39	1.16
M6Z-NP6LK-SSP	M6Z-NP6AK-SSP			PCTFE			0.51	0.55	0.65	0.52	(29.5)
M8A-NP6LR-SSP	M8A-NP6AR-SSP	8mm Compression A-LOK®		Blunt	0.177	4.5	0.60	0.50	0.67	0.39	1.24
M8A-NP6LK-SSP	M8A-NP6AK-SSP			PCTFE			0.51	0.55	0.65	0.52	(31.5)
M8Z-NP6LR-SSP	M8Z-NP6AR-SSP	8mm Compression CPI™		Blunt	0.177	4.5	0.60	0.50	0.67	0.39	1.24
M8Z-NP6LK-SSP	M8Z-NP6AK-SSP			PCTFE			0.51	0.55	0.65	0.52	(31.5)

* Tested in accordance with ISA S75.02. Gas flow will be choked when $P_1 - P_2 / P_1 = X_T$.
† For CPI™ and A-LOK®, dimensions are measured with nuts in the finger tight position.

Dimensions in inches/millimeters are for reference only, subject to change.

Parker Hannifin
Summary

- Refer to the appropriate catalog pages attached to this document for the part number descriptions for the V Series, VQ Series, and NP6 Series Needle Valves.
- The minimum wall thickness for all valves in this line is at the undercut of the thread on the valve body.
- The Pressure and Temperature curves for each valve series are included in the attached catalog pages.
- The Cold Working Pressure (CWP) is established by burst testing in accordance with MSS SP-99.
- A diagram of the components and the materials of constructions for each valve series are included in the attached catalog pages.
- Refer to the attached product integrity report for each valve series.
- **ASME / Design Standard**: Stress calculations are supported by burst tests in accordance with MSS SP-99
- **Size or Size Range**: Refer to above tables and attached catalog pages
- **Standard Pressure Class or MAWP at Maximum Temperature**: Refer to attached catalog pages and product integrity reports
- **Actual Wall Thickness vs. Miniumum Required**: Refer to attached product integrity reports
- **ASME / ASTM Material Specification**: The pressure boundary components are manufactured from materials listed in ASME B31.3. Refer to attached catalog pages and product integrity reports.
- Compression joint design (end connectors) is supported by **CRN 0A6793.5R3**.