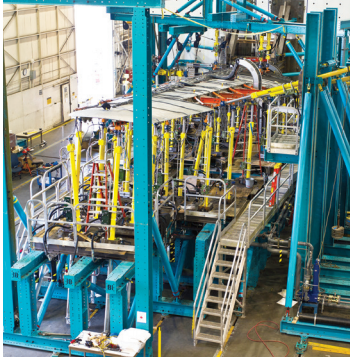

aerospace
climate control
electromechanical
filtration
fluid & gas handling
hydraulics
pneumatics
process control
sealing & shielding

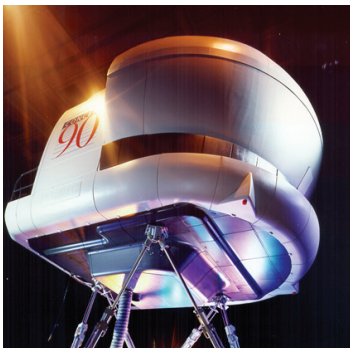

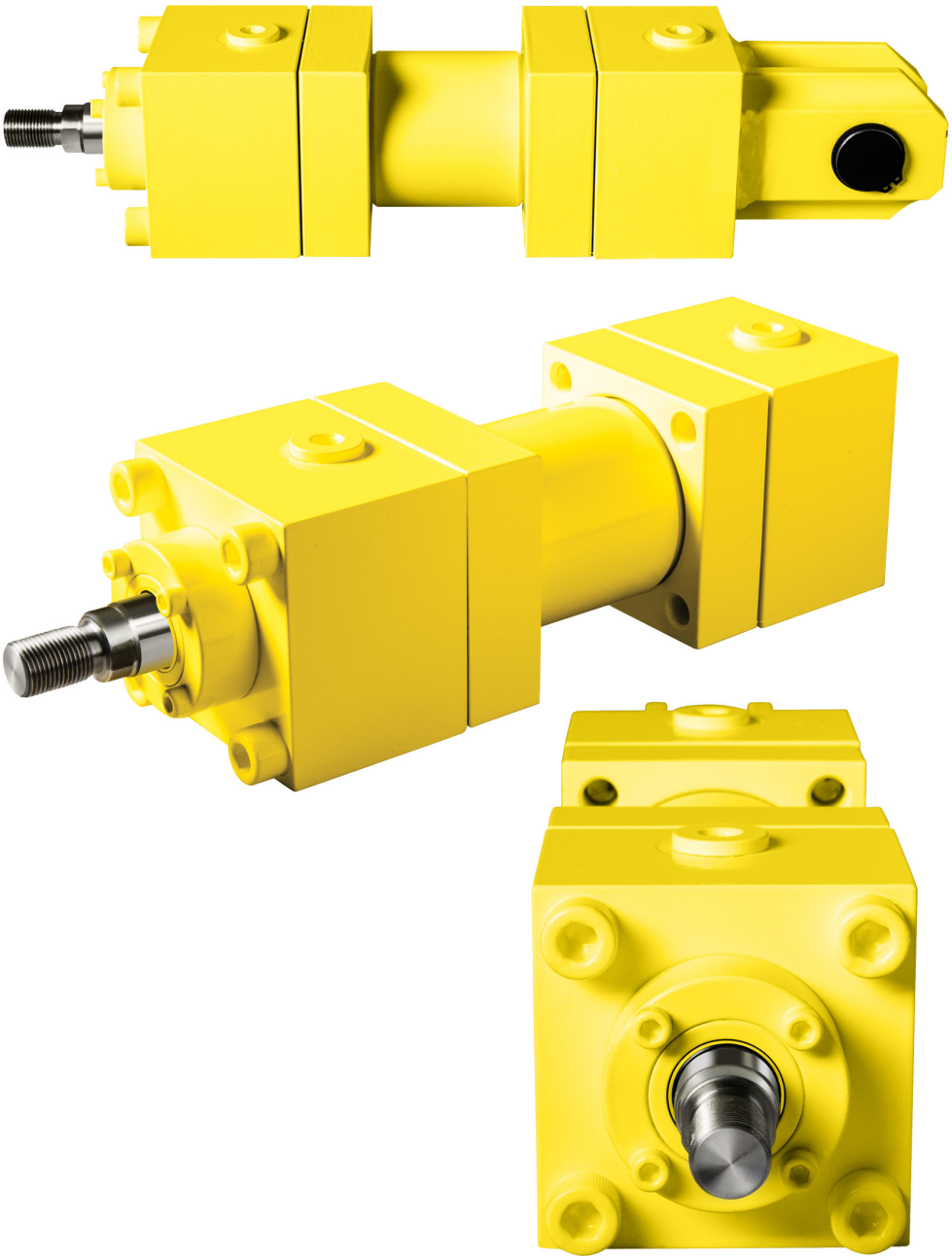

Fatigue and Static Test Actuators

FAST Series

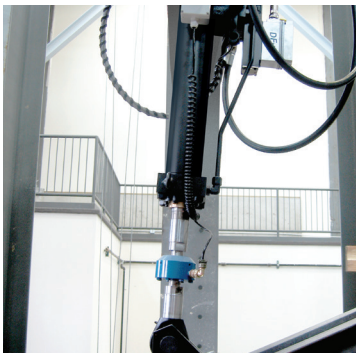

Parker

ENGINEERING YOUR SUCCESS.

Table of Contents

How To Order . . . . . Pages 2-3
Basic Cylinder Dimensions . . . . . Page 4
Single Rod End Mounting Dimensions . . . . . Page 5
Manifold Prep Dimensions . . . . . Pages 6-7
Port Option Dimensions . . . . . Pages 7-9
Double Rod End Mounting Dimensions . . . . . Page 10
Cylinder Weights . . . . . Page 11
Parts Identification . . . . . Page 12
Hard Part Materials . . . . . Page 13
Torque Values and Service Kits . . . . . Page 14

In line with our policy of continuing product improvement, specifications and information contained in this catalog are subject to change.

Copyright ©2015 by Parker Hannifin Corporation.
All rights reserved.

PRINTED IN THE U.S.A.

⚠ WARNING

FAILURE OR IMPROPER SELECTION OR IMPROPER USE OF THE PRODUCTS AND/OR SYSTEMS DESCRIBED HEREIN OR RELATED ITEMS CAN CAUSE DEATH, PERSONAL INJURY AND PROPERTY DAMAGE.

This document and other information from the Parker Hannifin Corporation, its subsidiaries and authorized distributors provide product and/or system options for further investigation by users having expertise. It is important that you analyze all aspects of your application, including consequences of any failure and review the information concerning the product or system in the current product catalog. Due to the variety of operating conditions and applications for these products or systems, the user, through its own analysis and testing, is solely responsible for making the final selection of the products and systems and assuring that all performance, safety and warning requirements of the application are met.

The products described herein, including without limitation, product features, specifications, designs, availability and pricing, are subject to change by Parker Hannifin Corporation and its subsidiaries at any time without notice.

Offer of Sale

The items described in this document are hereby offered for sale by Parker Hannifin Corporation, its subsidiaries or its authorized distributors. This offer and its acceptance are governed by provisions stated on a separate page of the document entitled ‘Offer of Sale’.

Parker Hannifin Corporation
Cylinder Division
Des Plaines, Illinois

View Table of Contents

FAST Series Cylinders Provide Maximum Service Life

Many applications require the maximum possible service life, especially for product testing and condition simulation. The FAST Series hydraulic cylinder is specifically designed to meet the rigorous demands of these applications. FAST Series (Fatigue And Static Test) cylinders have been endurance-rated to 3,000 psi by large aerospace customers and is an economical alternative to hydrostatic cylinders. If you need a cylinder to actuate not in the millions of cycles, but in the tens of millions of cycles, then this is the cylinder for you.

- Extreme duty service
- Endurance-rated to 3,000 psi service (5,000 psi service available)
- Designed for high frequency testing
- Field-serviceable design
- Bolted construction for pressure spikes and long strokes
- Multiple sets of seals with energizers and backups
- Multiple sets of wear rings for rod and piston
- Special mounts, rod ends, porting, materials, etc. are available for any quantity

Mounting Types	Port and Manifold Types
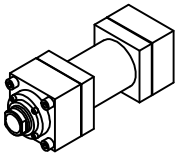 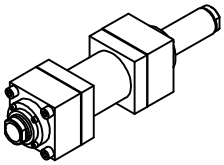 Basic Single Rod and Double Rod Cylinder Envelope Dimensions Page 4	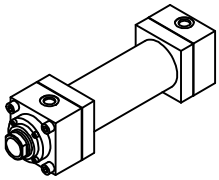 SAE O-Ring Ports Port Types H and Z Pages 7 and 9
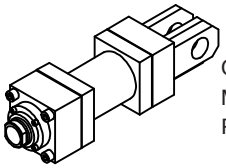 Cap Fixed Clevis Mount Mount C Page 5	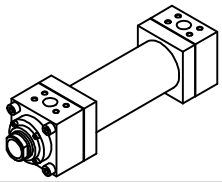 SAE Code 62 Flange Ports Port Types G and V Pages 8 and 9
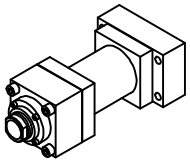 Cap Rectangular Flange Mount Mount R Page 5	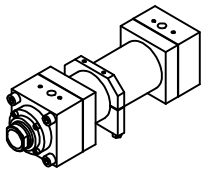 15 and 60 GPM Manifold Prep Manifold Types A and B Page 6
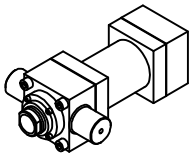 Head Trunnion Mount Mount T Page 5	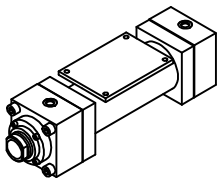 Small Static Test Manifold Prep Manifold Type E Page 7
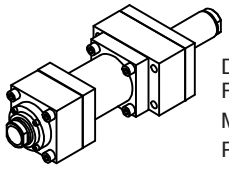 Double Rod Cylinder with Rectangular Flange at Head 2 Mount P Page 10	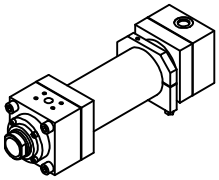 Large Static Test Manifold Prep Manifold Type C Page 6
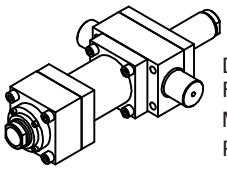 Double Rod Cylinder with Rectangular Flange and Trunnion at Head 2 Mount T Page 10	**For information on cylinders supplied with static and dynamic manifolds, please consult factory.**

View Table of Contents

How To Order

F — Test Type (for Cylinder Construction)

- S = Static (fixed position and non-stroking applications)
- F = Fatigue (multiple positions and stroking applications)

C — Barrel Type

- Blank = Unplated
- C = Chrome Plated ID (recommended for maximum cycle life or for use with HWCF)

A — Air Bleed Ports

- Blank = None
- A = 1/4" NPTF
- B = SAE #4
- (Air Bleed Ports are steel-plugged, located at each end of cylinder and 180° from port locations)

0250 — Bore Diameter (in inches)

- 0150 = 1.50
- 0200 = 2.00
- 0250 = 2.50
- 0325 = 3.25
- 0400 = 4.00
- 0500 = 5.00
- 0600 = 6.00
- 0700 = 7.00
- 0800 = 8.00
- 1000 = 10.00
- 1200 = 12.00
- 1400 = 14.00

R — Cap Mount

- C = Cap Fixed Clevis
- R = Cap Rectangular Flange

For Double Rod End Cylinders, Head 2 with Rectangular Flange Mount and:

- P = with Full Face Retainer
- R = with Bolt-On Retainer
- T = with Trunnion Pins and Full Face Retainer

- S = Special Specify "S" for special mount, and then describe in the item notes.

138 — Piston Rod Diameter (in inches)

- 100 = 1.00
- 138 = 1.38
- 175 = 1.75
- 200 = 2.00
- 250 = 2.50
- 300 = 3.00
- 350 = 3.50
- 400 = 4.00
- 450 = 4.50
- 500 = 5.00
- 550 = 5.50
- 700 = 7.00
- 800 = 8.00
- 1000 = 10.00

B — Port and Manifold Type

- H = Standard size SAE Port
- Z = Oversize SAE Port
- V = Standard SAE Code 62 4-Bolt Flange Port
- G = Oversize SAE Code 62 4-Bolt Flange Port
- A = Prepared for 15 GPM Manifold (with 2-Bolt Flange Ports)
- B = Prepared for 60 GPM Manifold (with 2-Bolt Flange Ports)
- E = Prepared for Small Static Manifold (with SAE #8 O-Ring Ports)
- C = Prepared for Large Static Manifold (with 4-Bolt Flange/ SAE #12 O-Ring Ports)
- X = Special Porting or Manifold Type

Table 1 — Available Piston Rod Diameters per Cylinder Bore Diameter

	Bore Ø											
	1.50	**2.00**	**2.50**	**3.25**	**4.00**	**5.00**	**6.00**	**7.00**	**8.00**	**10.00**	**12.00**	**14.00**
Rod Ø	1.00	1.00	1.00	1.38	1.75	2.00	2.50	3.00	3.50	4.50	5.50	7.00
		1.38	1.38	1.75	2.00	2.50	3.00	3.50	4.00	5.00	7.00	8.00
			1.75	2.00	2.50	3.00	3.50	4.00	4.50	5.50	8.00	10.00[1]
					3.00	3.50	4.00	4.50	5.00	7.00	10.00[1]	
						4.00	4.50	5.00	5.50	8.00		
							5.00	5.50	7.00			

[1] Consult factory for changes in cylinder and rod end dimensions

View Table of Contents

D — Rod Seals and Gland Drain

- Blank = Standard Rod Seals without Gland Drain
- D = Standard Rod Seals with Gland Drain
- J = Low Friction Rod Seals with Gland Drain

T — Head Trunnion Option

- Blank = None
- T = Trunnion Head End
- Y = Special Specify "Y" for special trunnion, and then describe in the item notes.

F — Piston Rod Threads (Rod End 1)

- F = Unified Female
- M = Unified Male
- Z = Special (specify)

6.000 — Stroke

- Specify in inches

DRE — Stroke Position Feedback and Double Rod End Cylinders

- Blank = None
- DRE = Double Rod Cylinder
- S = Includes Linear Displacement Transducer (LDT) for Single Rod End Cylinder

E — Rod End 2 Condition (only for Double Rod End Cylinders)

- Blank = None
- F = Unified Female
- M = Unified Male
- E = Prepared for LDT Feedback (Magnet Cavity for Stroke Position Feedback); specify LDT brand
- Z = Special (specify)

Z — Special Modification

- Blank = None
- Z = Special Specify "Z" for any other special modification, and then describe in the item notes.

NOTE: The standard paint system is a base primer coat with a topcoat of high-visibility yellow alkyd enamel paint. If an alternative paint system or color is required, please specify “Z” in the model code for Special Modification and detail the request in the item notes.

View Table of Contents

Basic Cylinder Dimensions

Basic Cylinder Dimensions based on use with Manifold Types A, B, C, E and H

Single Rod End

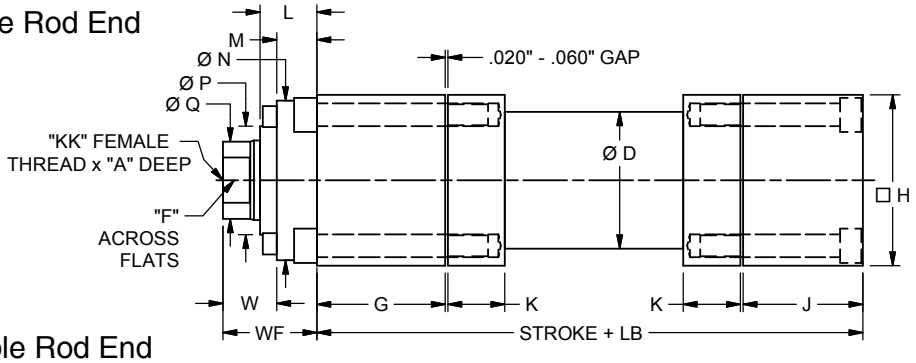

Double Rod End

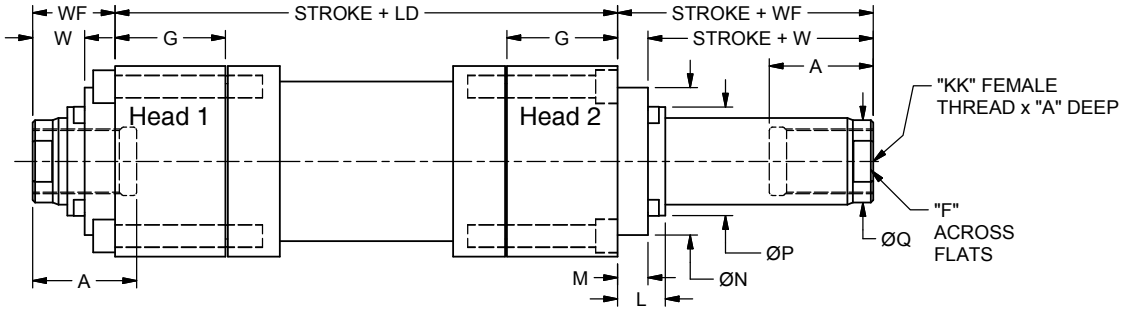

Table 1 — Dimensional and Mounting Data

Bore Ø	D	G	H	J	K	Add Stroke	
						LB	LD
1.50	1.88	2.81	3.25	2.63	1.13	8.13	8.31
2.00	2.38	2.81	3.25	2.63	1.13	8.13	8.31
2.50	3.00	2.81	3.75	2.63	1.25	8.38	8.56
3.25	3.75	2.94	4.75	2.63	1.50	9.00	9.31
4.00	4.60	3.19	5.50	2.63	1.50	9.50	10.06
5.00	5.75	3.19	7.00	2.88	1.50	10.50	10.81
6.00	7.00	3.19	8.00	2.88	1.75	11.00	11.31
7.00	8.00	3.44	9.00	2.88	2.00	11.63	12.19
8.00	9.25	3.44	10.00	3.00	2.38	12.25	12.69
10.00	11.50	4.44	13.00	3.69	2.88	14.00	14.75
12.00	14.00	4.94	16.00	4.44	3.50	15.25	15.75
14.00	17.00	5.88	19.00	4.88	3.88	17.50	18.50

Note: Optional male thread has the same thread size and length as the standard female thread. The length of the male thread (A dimension) extends from the W dimension.

Table 2 — Piston Rod Related Dimensional and Mounting Data

Rod Ø	A	F	KK[1]	L	M	N	P	Q	WF	W
1.00	1.13	0.875	3/4-16	1.25	0.875[2]	2.38	1.50	0.94	1.81	0.94
1.38	1.63	1.125	1-12	1.25	0.875	2.88	2.00	1.31	2.06	1.19
1.75	2.00	1.500	1 1/4-12	1.25	0.875	3.50	2.38	1.69	2.06	1.19
2.00	2.25	1.688	1 1/2-12	1.38	0.875	3.75	2.63	1.94	2.38	1.50
2.50	3.00	2.063	1 7/8-12	1.38	0.875	4.25	3.13	2.38	2.38	1.50
3.00	3.50	2.625	2 1/4-12	1.38	0.875	5.44	3.75	2.88	2.63	1.75
3.50	3.50	3.000	2 1/2-12	1.38	0.875	5.94	4.25	3.38	2.63	1.75
4.00	4.00	3.375	3-12	1.38	0.875	6.31	4.75	3.88	2.88	2.00
4.50	4.50	3.875	3-12	1.38	0.875	6.94	5.25	4.38	2.88	2.00
5.00	5.00	4.250	3 1/4-12	1.38	0.875	7.44	5.75	4.88	3.38	2.50
5.50	5.50	4.625	4-12	1.38	0.875	7.94	6.25	5.38	3.38	2.50
7.00	5.50	6.000	4-12	1.56	0.875	9.88	7.75	6.88	3.88	3.00
8.00	8.00	7.000	4 1/2-12	1.81	0.875	10.94	8.75	7.88	3.88	3.00

[1] Standard female threads will be Unified National Standard (UNJ) Class 3B Per SAE AS8879 with thread relief per ANSI-Y14.6 and lead-in countersink of 45° to first thread. Thread depths will permit thread adapters to be fully engaged. Optional male threads will be Unified National Standard (UN) Class 2A.

[2] For Ø1.00 rod with gland drain cartridge, dimension M = 1.125

View Table of Contents

Single Rod End Mounting Dimensions

Style C – Cap Fixed Clevis Mounting

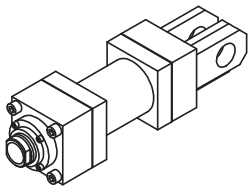

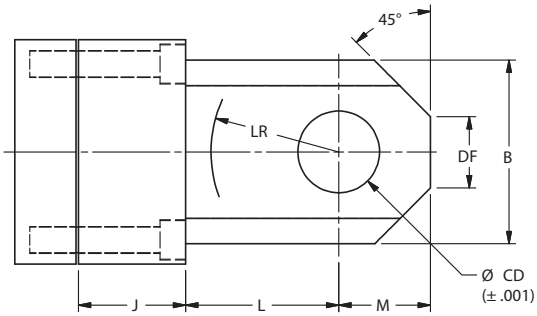

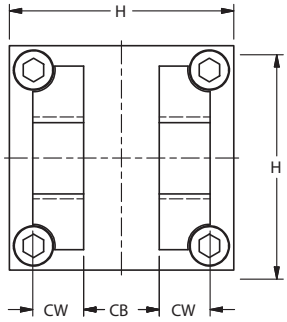

Style R – Cap Rectangular Flange Mounting

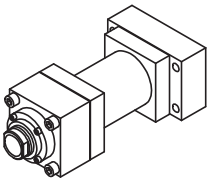

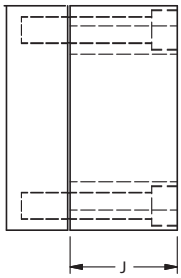

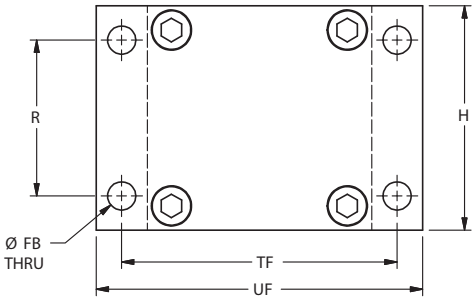

Style T – Head Trunnion Mounting (Option)

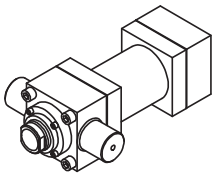

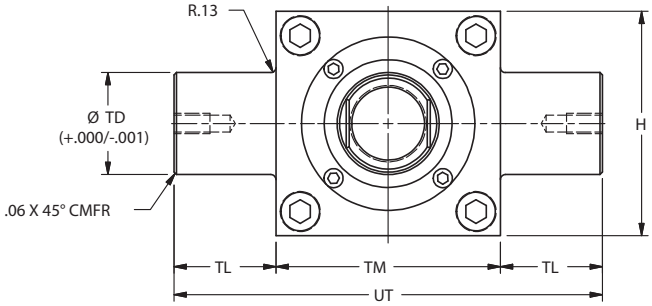

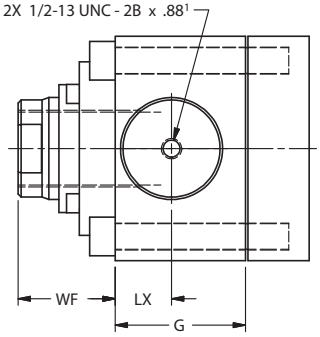

Table 1 — Dimensional and Mounting Data

Bore Ø	B	CB	CD	CW	DF	FB	L	LR	LX	M	R	TD	TF	TL	TM	UF	UT
1.50	1.75	0.81	0.878	0.63	0.75	0.56	1.75	1.38	1.25	0.88	2.05	1.75	4.25	1.75	5.50	5.25	9.00
2.00	1.75	0.81	0.878	0.63	0.75	0.56	1.75	1.38	1.25	0.88	2.05	1.75	4.25	1.75	5.50	5.25	9.00
2.50	3.00	1.13	1.253	0.75	1.25	0.56	2.50	2.00	1.25	1.50	2.55	1.75	4.75	1.75	6.00	5.75	9.50
3.25	3.00	1.13	1.253	0.75	1.25	0.69	2.50	2.00	1.25	1.50	3.25	2.00	6.00	2.00	6.00	7.25	10.00
4.00	4.50	1.85	2.003	1.25	1.75	0.69	3.75	3.13	1.38	2.25	3.82	2.50	6.75	2.50	7.00	8.00	12.00
5.00	4.50	1.85	2.003	1.25	1.75	0.94	3.75	3.13	1.38	2.25	4.95	2.50	8.75	2.50	8.50	10.50	13.50
6.00	6.50	2.25	2.503	1.50	2.50	1.06	4.25	3.50	1.38	3.25	5.73	2.50	10.00	2.50	11.00	12.00	16.00
7.00	6.50	2.25	2.503	1.50	2.50	1.19	4.25	3.50	1.63	3.25	6.58	3.00	11.00	3.00	13.50	13.00	19.50
8.00	8.00	2.75	3.003	1.50	3.00	1.31	5.25	4.38	1.63	4.00	7.50	3.00	12.25	3.00	15.50	14.50	21.50
10.00	9.50	3.13	3.503	2.00	3.75	1.81	6.50	5.50	2.19	4.75	9.62	4.25	16.25	4.25	15.50	19.50	24.00
12.00	12.00	3.85	4.003	2.25	4.75	1.94	7.50	6.50	2.44	6.00	11.45	4.75	19.50	4.75	17.00	23.00	26.50
14.00	12.50	4.50	5.003	3.00	5.00	2.44	8.50	7.25	2.88	6.25	15.00	4.75	24.00	4.75	20.00	28.00	29.50

[1] Note: For 7.00" and larger bores, tapped hole on trunnion pin face is 3/4"-10 UNC-2B x 1.25" deep.

View Table of Contents

Manifold Prep and Port Dimensions

Type A – 15 GPM Manifold

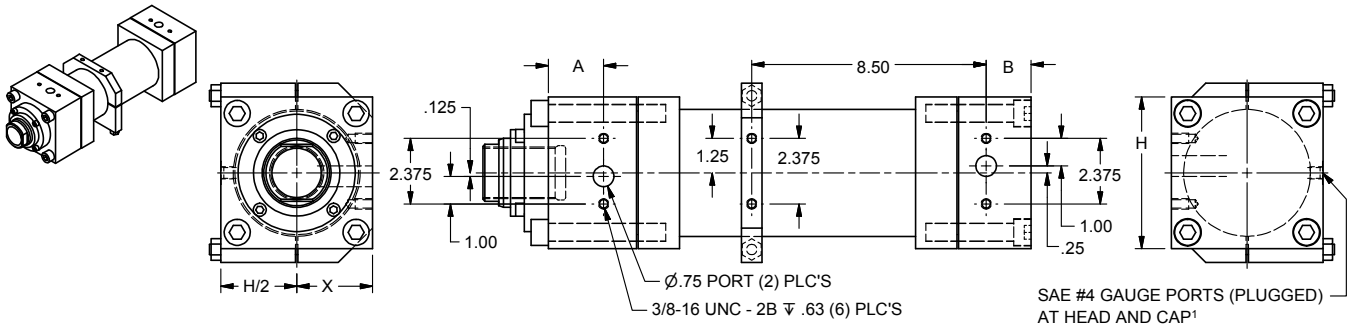

Type B – 60 GPM Manifold

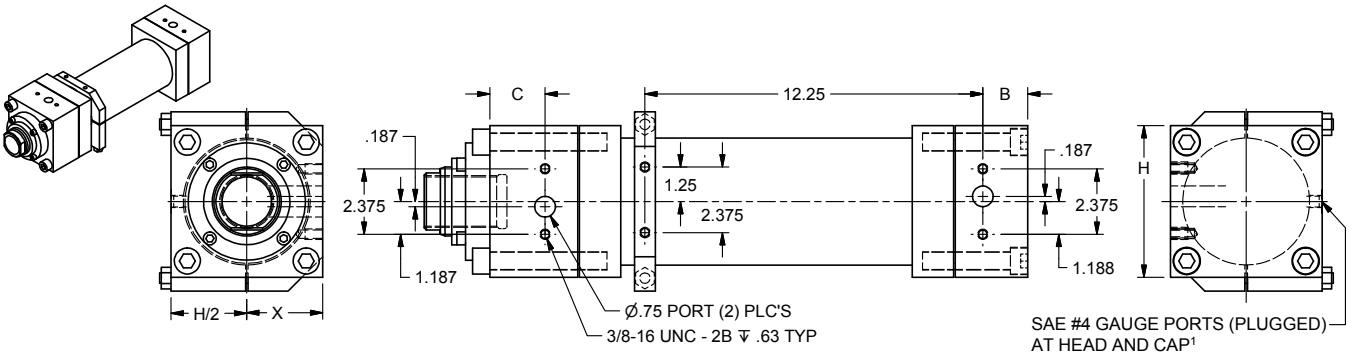

Type C – Large Static Test Manifold

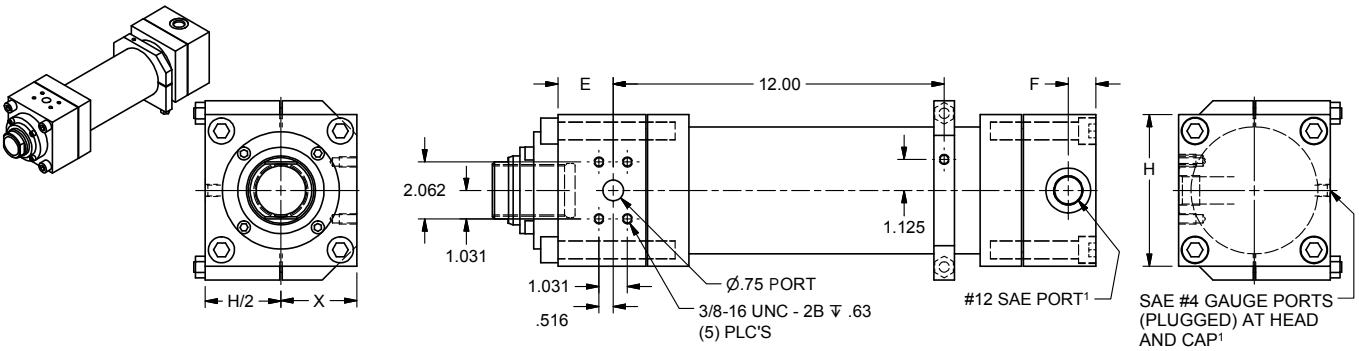

Table 1 — Dimensional and Mounting Data

Bore Ø	A	B	C	E	F	H	X	Min. Stroke Per Manifold Type		
								Type A	Type B	Type C
1.50	1.75	1.63	1.75	1.75	1.00	3.25	2.13[2]	7.00	10.00	10.00
2.00	1.75	1.63	1.75	1.75	1.00	3.25	2.13[2]	7.00	10.00	10.00
2.50	1.75	1.63	1.75	1.75	1.00	3.75	2.38[2]	7.00	10.00	10.00
3.25	2.00	1.63	2.00	1.75	1.00	4.75	2.88[2]	7.00	10.00	10.00
4.00	2.00	1.63	2.00	2.00	1.00	5.50	H/2	6.00	10.00	10.00
5.00	2.00	1.63	2.00	2.00	1.00	7.00	H/2	5.00	9.00	9.00
6.00	2.00	1.63	2.00	2.00	1.00	8.00	H/2	5.00	9.00	9.00
7.00	2.00	1.63	2.00	2.00	1.19	9.00	H/2	5.00	8.00	8.00
8.00	2.00	1.63	2.00	2.00	1.38	10.00	H/2	5.00	8.00	8.00
10.00	2.00	1.63	2.00	2.00	1.75	13.00	H/2	4.00	8.00	8.00
12.00	2.00	1.63	2.00	2.00	1.94	16.00	H/2	4.00	8.00	8.00
14.00	3.88	2.88	3.88	3.88	2.50	19.00	H/2	5.00	8.00	8.00

[1] All SAE straight thread o-ring ports are per SAE J514

[2] Dimension "X" values only apply to the head of cylinders with Manifold Types A, B and C.

View Table of Contents

Manifold Prep and Port Dimensions

Type E – Small Static Test Manifold

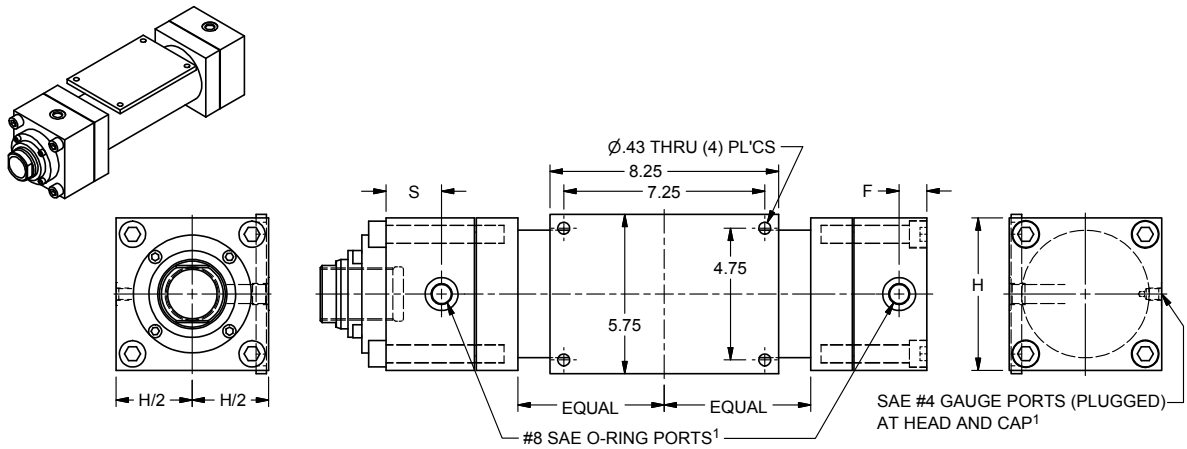

Type H – SAE O-Ring Ports (standard size)

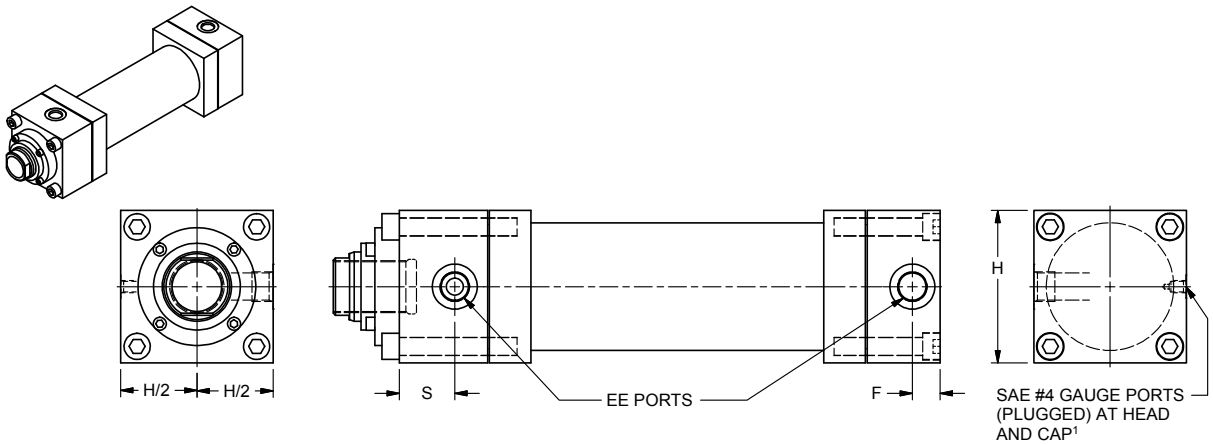

Table 1 — Dimensional and Mounting Data

Bore Ø	F	H	S	EE (SAE)[1]	EE (ISO 6149)	Min. Stroke Per Manifold Type	
						Type E	Type H
1.50	1.00	3.25	1.75	8	M18 X 1.5	9.00	1.00
2.00	1.00	3.25	1.75	8	M18 X 1.5	9.00	1.00
2.50	1.00	3.75	1.75	8	M18 X 1.5	9.00	1.00
3.25	1.00	4.75	1.75	12	M27 X 2	9.00	1.00
4.00	1.00	5.50	2.00	12	M27 X 2	8.00	1.00
5.00	1.00	7.00	2.00	12	M27 X 2	8.00	1.00
6.00	1.00	8.00	2.00	16	M33 X 2	8.00	1.00
7.00	1.19	9.00	2.00	20	M42 X 2	8.00	1.00
8.00	1.38	10.00	1.81	24	M48 X 2	8.00	1.00
10.00	1.75	13.00	2.63	24	M48 X 2	9.00	1.00
12.00	1.94	16.00	2.75	32	M60 X 2	10.00	3.00
14.00	2.50	19.00	3.50	32	M60 X 2	10.00	2.00

[1] All SAE straight thread o-ring ports are per SAE J514

View Table of Contents

Port Option Dimensions

Type V – SAE Code 62 Flange Ports (standard size)

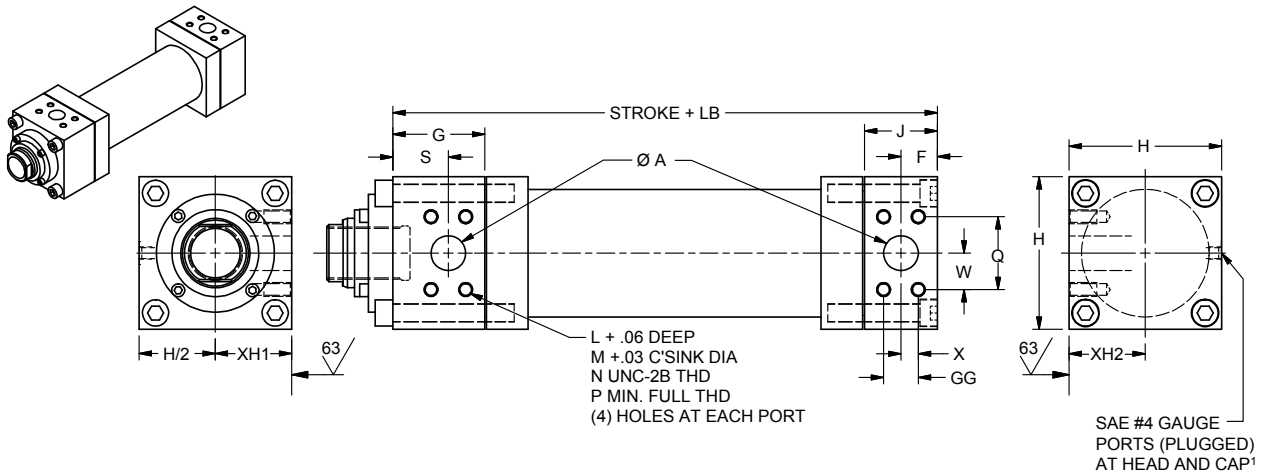

Table 1 – Dimensional and Mounting Data

Bore Ø	A	F	G	GG	H	J	L	M	N	P	Q	S	W	X	XH1	XH2	Add Stroke LB
1.50	0.50	1.25	2.81	0.718	3.25	2.63	1.09	0.312	5/16-18	0.81	1.594	1.88	0.797	0.359	2.13	2.13	8.13
2.00	0.50	1.25	2.81	0.718	3.25	2.63	1.09	0.312	5/16-18	0.81	1.594	1.88	0.797	0.359	2.13	2.13	8.13
2.50	0.50	1.25	2.81	0.718	3.75	2.63	1.09	0.312	5/16-18	0.81	1.594	1.88	0.797	0.359	H/2[2]	H/2	8.38
3.25	0.75	1.25	2.94	0.937	4.75	2.63	1.25	0.375	3/8-16	0.94	2.000	1.75	1.000	0.468	H/2[3]	H/2	9.00
4.00	0.75	1.25	3.19	0.937	5.50	2.63	1.25	0.375	3/8-16	0.94	2.000	2.00	1.000	0.468	H/2[4]	H/2	9.50
5.00	0.75	1.25	3.19	0.937	7.00	2.88	1.25	0.375	3/8-16	0.94	2.000	2.00	1.000	0.468	H/2[5]	H/2	10.50
6.00	1.00	1.25	3.19	1.093	8.00	2.88	1.37	0.438	7/16-14	1.06	2.250	1.88	1.125	0.546	H/2[6]	H/2	11.00
7.00	1.25	1.25	3.44	1.250	9.00	2.88	1.36	0.500	1/2-13	1.00	2.625	1.94	1.312	0.625	H/2[7]	H/2	11.63
8.00	1.50	1.38	3.88	1.437	10.00	3.00	1.76	0.625	5/8-11	1.38	3.125	2.25	1.562	0.718	H/2	H/2	12.69
10.00	1.50	1.75	4.44	1.437	13.00	3.69	1.76	0.625	5/8-11	1.38	3.125	2.63	1.562	0.718	H/2	H/2	14.00
12.00	2.00	1.94	4.94	1.750	16.00	4.44	2.00	0.750	3/4-10	1.50	3.812	2.75	1.906	0.875	H/2	H/2	15.25
14.00	2.00	2.50	5.88	1.750	19.00	4.88	2.00	0.750	3/4-10	1.50	3.812	3.50	1.906	0.857	H/2	H/2	17.50

[1] All SAE straight thread o-ring ports are per SAE J514
[2] XH1=2.13 for 2.50" bore with 1-3/8" rod; XH1=2.38 for 2.50" bore with 1-3/4" rod
[3] XH1=2.63 for 3.25" bore with 2" rod
[4] XH1=3.00 for 4.00" bore with 2-1/2" rod; XH1=3.25 for 4" bore with 3" rod
[5] XH1=3.75 for 5.00" bore with 4" rod
[6] XH1=4.25 for 6.00" bore with 4-1/2" rod; XH1=4.50 for 6.00" bore with 5" rod
[7] XH1=4.75 for 7.00" bore with 5-1/2" rod

View Table of Contents

Port Option Dimensions

Type Z – Oversize SAE O-Ring Ports

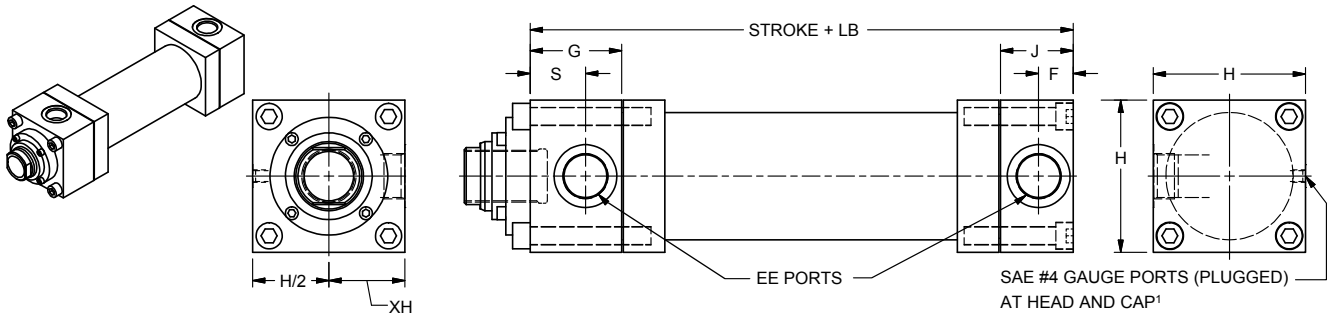

Table 1 – Dimensional and Mounting Data

Bore Ø[2]	EE (SAE)	F	G	H	J	S	XH	Add Stroke LB
1.50	12	1.00	2.81	3.25	2.63	1.75	H/2	8.13
2.00	12	1.00	2.81	3.25	2.63	1.75	H/2[3]	8.13
2.50	12	1.00	2.81	3.75	2.63	1.75	H/2[4]	8.38
3.25	16	1.00	2.94	4.75	2.63	1.75	H/2	9.00
4.00	20	1.25	3.31	5.50	2.63	2.00	H/2	9.63
5.00	20	1.25	3.31	7.00	2.88	2.00	H/2	10.63
6.00	24	1.31	3.31	8.00	2.88	2.00	H/2	11.13
7.00	24	1.31	3.44	9.00	2.88	2.00	H/2	11.63
8.00	32	1.75	4.13	10.00	3.69	2.25	H/2	13.63
10.00	32	1.69	4.44	13.00	3.69	2.44	H/2	14.00

[1] All SAE straight thread o-ring ports are per SAE J514

[2] Oversize SAE straight thread o-ring ports are not available for 12.00" and 14.00" bores

[3] XH=1.88 for 2.00" bore with 1-3/8" rod

[4] XH=2.13 for 2.50" bore with 1-3/4" rod

Type G – Oversize SAE Code 62 Flange Ports

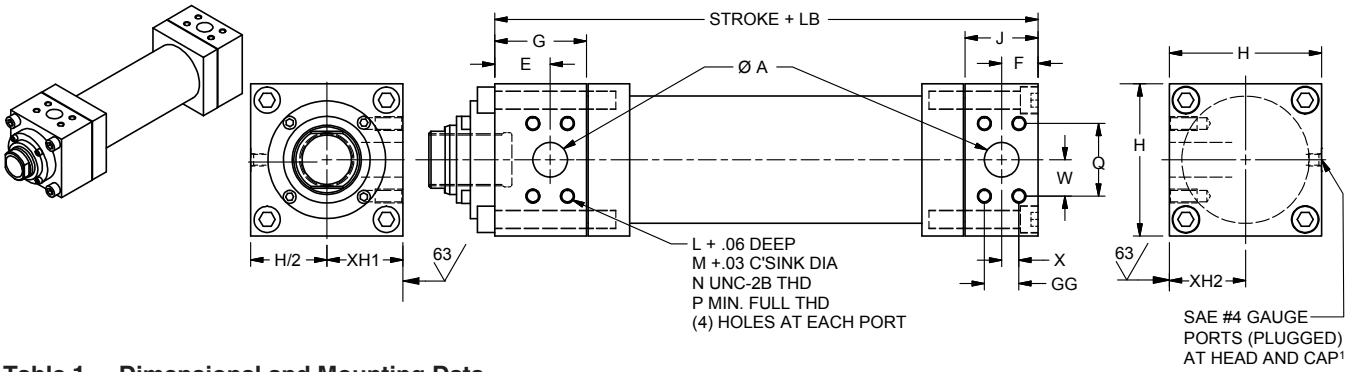

Table 1 – Dimensional and Mounting Data

Bore Ø[5]	A	E	F	G	GG	H	J	L	M	N	P	Q	W	X	XH1	XH2	Add Stroke LB
1.50	0.75	1.75	1.38	2.81	0.937	3.25	2.63	1.25	0.375	3/8-16	0.94	2.000	1.000	0.468	2.38	2.38	8.13
2.00	0.75	1.75	1.38	2.81	0.937	3.25	2.63	1.25	0.375	3/8-16	0.94	2.000	1.000	0.468	2.38	2.38	8.13
2.50	0.75	1.75	1.38	2.81	0.937	3.75	2.63	1.25	0.375	3/8-16	0.94	2.000	1.000	0.468	2.50	2.50	8.38
3.25	1.00	1.75	1.38	2.94	1.093	4.75	2.63	1.37	0.438	7/16-14	1.06	2.250	1.125	0.546	3.00	H/2	9.00
4.00	1.25	1.97	1.25	3.31	1.250	5.50	2.63	1.36	0.500	1/2-13	1.00	2.625	1.312	0.625	H/2[6]	H/2	9.63
5.00	1.50	2.25	1.25	3.75	1.437	7.00	2.88	1.76	0.625	5/8-11	1.38	3.125	1.562	0.718	H/2[7]	H/2	11.06
6.00	1.50	2.25	1.25	3.75	1.437	8.00	2.88	1.76	0.625	5/8-11	1.38	3.125	1.562	0.718	H/2[8]	H/2	11.56
7.00	1.50	2.25	1.19	3.88	1.437	9.00	2.88	1.76	0.625	5/8-11	1.38	3.125	1.562	0.718	H/2	H/2	12.06

[5] Oversize SAE Code 62 Flange Ports are not available from 8.00" to 14.00" bores

[6] XH1=3.25 for 4.00" bore with 3" rod

[7] XH1=3.75 for 5" bore with 3.5" rod; XH1=4.00 for 5.00" bore with 4" rod

[8] XH1=4.38 for 6" bore with 4.5" rod; XH1=4.63 for 6.00" bore with 5" rod

View Table of Contents

Double Rod End Mounting Dimensions

Style P – Head 2 Rectangular Flange Mounting

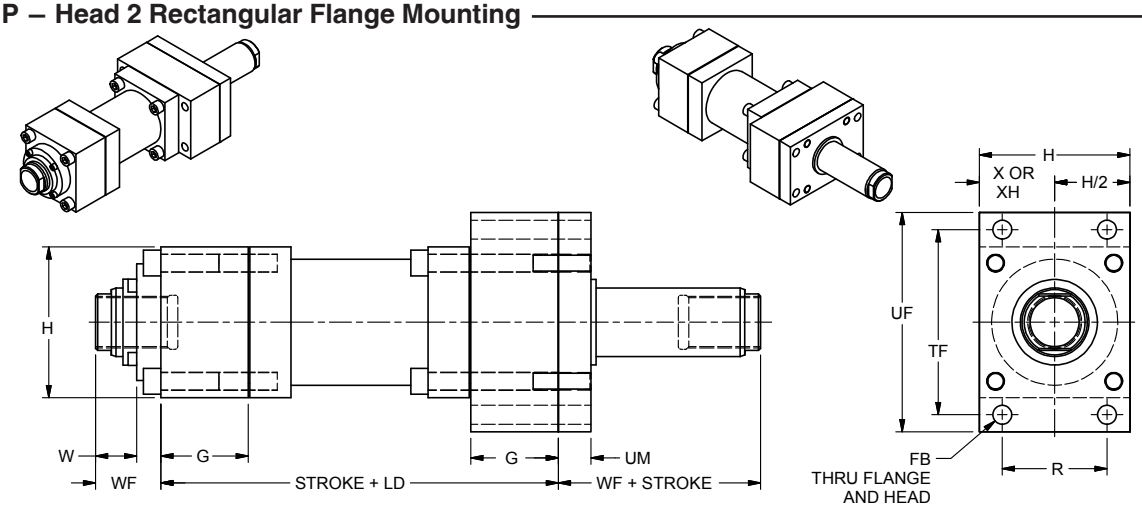

Style T – Head 2 Rectangular Flange with Trunnion Mounting

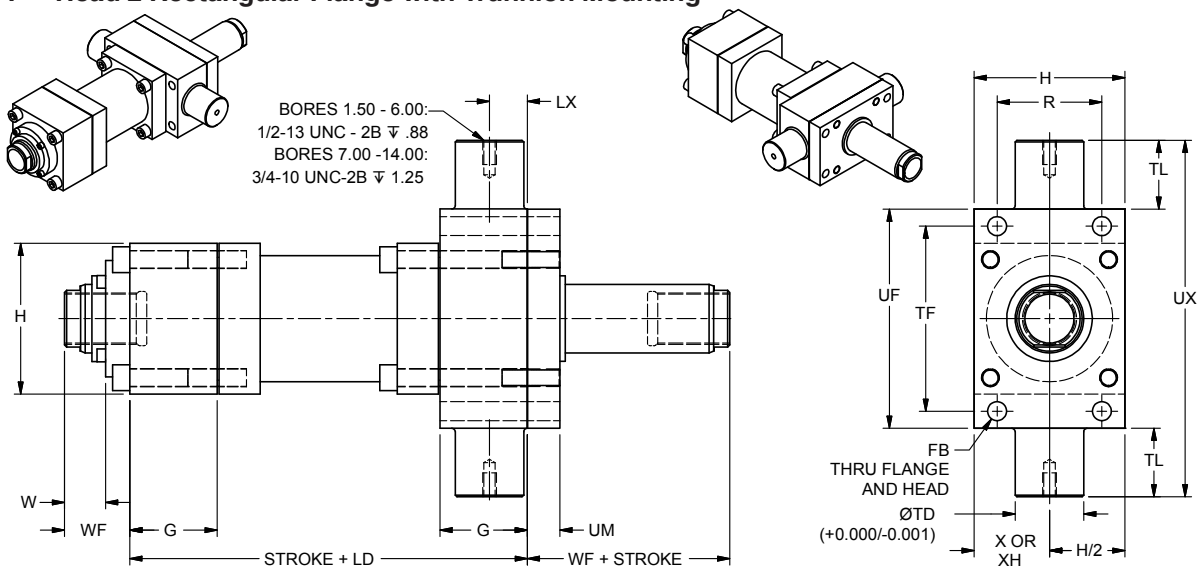

Table 1 – Dimensional and Mounting Data for Double Rod End Mounting Styles P and T

Note: For all other standard cylinder and piston rod related dimensions, please see page 4. For porting option dimensions, please see pages 7 - 9.

Bore Ø	FB	LX	TD	TF	TL	UF	UM	UX	Add Stroke	Min. Stroke Per Manifold Type[1]	
									LD	Type E	Type H
1.50	0.56	1.25	1.75	4.25	1.75	5.25	0.88	8.75	8.31	19.00	6.00
2.00	0.56	1.25	1.75	4.25	1.75	5.25	0.88	8.75	8.31	19.00	6.00
2.50	0.56	1.25	1.75	4.75	1.75	5.75	0.88[2]	9.25	8.56	19.00	6.00
3.25	0.69	1.25	2.00	6.00	2.00	7.25	1.00	11.25	9.31	19.00	6.00
4.00	0.69	1.38	2.50	6.75	2.50	8.00	1.19	13.00	10.06	19.00	6.00
5.00	0.94	1.38	2.50	8.75	2.50	10.50	1.31	15.50	10.81	18.00	5.00
6.00	1.06	1.38	2.50	10.00	2.50	12.00	1.38	17.00	11.31	18.00	5.00
7.00	1.19	1.63	3.00	11.00	3.00	13.00	1.69	19.00	12.19	18.00	5.00
8.00	1.31	1.63	3.00	12.25	3.00	14.50	1.88	20.50	12.69	19.00	6.00
10.00	1.81	2.19	4.25	16.25	4.25	19.50	1.25	28.00	14.75	20.00	7.00
12.00	1.94	2.44	4.75	19.50	4.75	23.00	1.50	32.50	15.75	21.00	8.00
14.00	2.44	2.88	4.75	24.00	4.75	28.00	1.75	37.50	18.50	21.00	7.00

[1] For minimum strokes of Manifold Types A, B and C, please see page 6

[2] UM=1.00 for 2.50" bore with 1.75" rod

Cylinder Weights

View Table of Contents

The estimated weights shown below are for standard FAST Series hydraulic cylinders equipped with the different piston rod diameters. To determine the total net weight of a cylinder, first select the Basic Weight for the proper mount at zero stroke, then calculate the weight of the cylinder stroke and add the result to the Basic Weight.

These are approximate weights based on standard head sizes, cap sizes and rod extension		Single Rod End						Double Rod End					Add Per Manifold Type A, B or C
		Basic Weight at Zero Stroke					Add Per Inch of Stroke	Basic Weight at Zero Stroke				Add Per Inch of Stroke	
		Without Trunnion Head			With Trunnion Head (T)			No Mount	Head 2 P Mount	Head 2 R Mount	Head 2 T Mount		
Bore Ø	Rod Ø	No Mount	Cap Mount C	Cap Mount R	Cap Mount C	Cap Mount R							
1.50	1.000	24.5	25.9	29.3	34.1	37.5	0.5	26.4	34.7	31.6	37.1	0.7	2.0
2.00	1.000	24.6	26.0	29.5	34.2	37.7	0.6	26.5	34.8	31.7	37.2	0.8	2.0
	1.375	25.4	26.8	30.3	35.0	38.5	0.8	28.1	35.9	33.3	38.3	1.2	
2.50	1.000	33.4	37.7	39.0	46.8	48.1	0.8	35.5	46.4	41.5	48.8	1.1	2.5
	1.375	34.2	38.5	39.8	47.6	48.9	1.0	37.1	47.5	43.1	49.9	1.5	
	1.750	35.3	39.6	40.9	48.7	50.0	1.3	39.3	48.9	45.2	51.2	2.0	
3.25	1.375	57.5	61.7	66.3	70.2	74.8	1.2	61.6	79.6	71.5	83.1	1.6	3.1
	1.750	58.6	62.8	67.4	71.3	75.9	1.5	63.8	80.9	73.6	84.5	2.1	
	2.000	59.5	63.7	68.3	72.2	76.8	1.7	65.5	82.3	75.4	85.8	2.6	
4.00	1.750	80.8	96.3	91.0	110.7	105.4	1.8	88.8	113.4	101.2	120.4	2.5	3.4
	2.000	81.7	97.2	91.9	111.6	106.3	2.0	90.6	114.8	103.0	121.7	2.9	
	2.500	83.2	98.7	93.4	113.1	107.8	2.5	93.6	116.9	106.0	123.8	3.9	
	3.000	86.9	102.4	97.1	116.8	111.5	3.1	100.9	121.8	113.3	128.7	5.1	
5.00	2.000	138.3	153.8	158.2	170.3	174.6	2.7	146.7	192.9	168.8	199.9	3.6	5.5
	2.500	139.8	155.4	159.8	171.8	176.2	3.2	149.8	195.0	171.9	201.9	4.6	
	3.000	143.5	159.0	163.4	175.4	179.8	3.8	157.1	199.8	179.2	206.7	5.8	
	3.500	145.9	161.4	165.8	177.8	182.2	4.5	161.8	203.1	183.9	210.1	7.2	
6.00	2.500	191.2	208.5	217.3	237.1	245.9	4.3	202.5	264.6	231.4	271.6	5.7	6.0
	3.000	194.9	212.2	220.9	240.7	249.5	4.9	209.8	269.4	238.7	276.3	6.9	
	3.500	197.3	214.5	223.3	243.1	251.9	5.6	214.5	272.7	243.4	279.6	8.3	
	4.000	200.5	217.8	226.5	246.4	255.1	6.4	221.0	277.8	249.9	284.8	10.0	
	4.500	204.0	221.3	230.0	249.9	258.6	7.4	228.0	282.7	256.9	289.7	11.9	
7.00	3.000	259.6	293.4	288.9	344.8	340.3	5.3	281.8	365.4	316.8	377.4	7.3	8.0
	3.500	262.0	295.8	291.3	347.2	342.7	6.1	286.5	368.4	321.5	380.4	8.8	
	4.000	265.2	299.0	294.5	350.4	345.9	6.9	293.0	373.3	328.0	385.3	10.4	
	4.500	268.7	302.5	298.0	353.9	349.4	7.8	300.0	377.9	335.0	389.9	12.3	
	5.000	275.0	308.8	304.3	360.2	355.7	8.9	312.6	388.2	347.6	400.3	14.4	
8.00	3.500	341.7	393.2	379.9	458.7	445.4	7.5	365.7	477.0	409.5	489.0	10.2	8.0
	4.000	345.0	396.5	383.2	462.0	448.7	8.3	372.2	481.8	416.0	493.8	11.9	
	4.500	348.5	400.0	386.7	465.5	452.2	9.3	379.2	486.2	423.0	498.2	13.8	
	5.000	354.7	406.2	392.9	471.8	458.5	10.3	391.8	496.4	435.6	508.4	15.9	
	5.500	359.2	410.7	397.4	476.2	462.9	11.5	400.6	502.5	444.4	514.5	18.2	
10.00	4.500	675.0	775.7	763.2	850.7	838.1	11.7	729.3	914.0	835.4	948.1	16.2	11.5
	5.000	681.3	782.0	769.5	856.9	844.4	12.7	741.8	924.8	847.9	958.9	18.3	
	5.500	685.7	786.4	773.9	861.4	848.8	13.9	750.7	931.7	856.8	965.8	20.6	
	7.000	708.3	809.0	796.5	883.9	871.4	18.1	795.8	968.6	901.9	1002.7	29.0	
12.00	5.500	1164.1	1337.7	1304.8	1407.7	1374.8	18.3	1229.4	1525.7	1385.9	1573.3	25.0	17.3
	7.000	1186.7	1360.2	1327.3	1430.2	1397.3	22.4	1274.5	1561.5	1431.0	1609.1	33.3	
	8.000	1201.0	1374.5	1341.6	1444.5	1411.6	25.8	1303.2	1583.7	1459.7	1631.4	40.0	
14.00	7.000	1874.2	2130.0	2110.1	2209.2	2189.3	31.6	2028.0	2547.3	2312.3	2594.9	42.5	25.0
	8.000	1888.5	2144.3	2124.4	2223.5	2203.6	34.9	2056.6	2568.7	2340.9	2616.3	49.1	

View Table of Contents

For Single Rod or Double Rod End Cylinders

Example: Cylinder with SAE Ports and optional Double Rod End, Air Bleeds, Gland Drain, Full Flange Retainer and Rod End 2 with Magnet Cavity

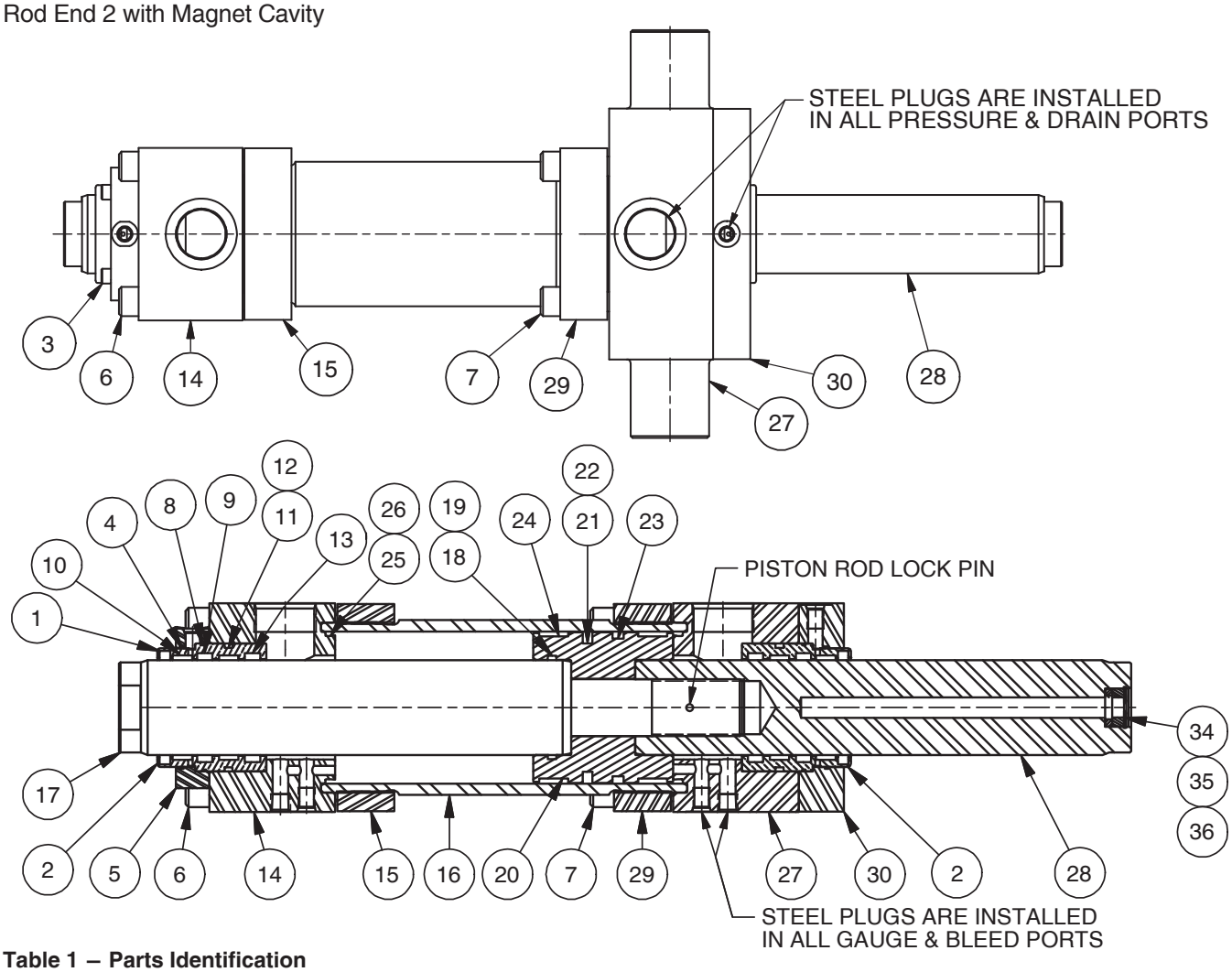

Table 1 – Parts Identification

Symbol	Description
1	Rod wiper
2	Cartridge
3	Cartridge retainer cap screw
4	Outboard gland drain seal (per option)
5	Cartridge retainer
6	Head cap screw
7	Cap screw (or Head 2 screw for Double Rod End cylinder option)
8	Inboard gland drain seal (per option)
9	Secondary rod seal
10	Rod wear ring
11	Cartridge OD seal
12	Cartridge OD seal backup ring
13	Primary rod seal
14	Head
15	Barrel flange (standard)
16	Barrel
17	Primary piston rod
18	Piston ID seal

Symbol	Description
19	Piston ID seal backup ring
20	Piston
21	Piston OD seal for Fatigue Service option
22	Piston OD seal energizer for Fatigue Service option
23	Piston OD seal with energizer for Static Service option[1]
24	Piston wear ring
25	Barrel seal
26	Barrel seal backup ring (7.00" bore and larger)
27	Cap (or Head 2 for Double Rod End cylinder option)
28	Piston rod 2 for Double Rod End cylinder option (i.e. extension rod)
29	Barrel flange (shown with thru holes for optional part #30)
30	Full face cartridge retainer option (shown with Double Rod End with Gland Drain option)
31	Manifold support bracket for Types A, B or C (not shown) (option)
32	Manifold support bracket studs (not shown)
33	Manifold support bracket nuts (not shown)
34	Magnet spacer for Double Rod End cylinder (option)
35	Magnet ring for Double Rod End cylinder (option)
36	Magnet assembly retaining rings for Double Rod End cylinder (option)

[1] (2) Polypak piston seals for 8.00" bores and larger

View Table of Contents

Hard Part Materials

Table 1 – Head, Cap, Piston, Barrel, Barrel Flange and Rectangular Retainer Materials

Item Number and Description	Bore Ø											
	1.50	2.00	2.50	3.25	4.00	5.00	6.00	7.00	8.00	10.00	12.00	14.00
14 - Head, Square (basic)	E	E	B	E	E	E	E	E	E	E	E	E
14 - Head, Trunnion	*	*	*	*	*	*	*	*	*	*	*	*
15 - Barrel Flange (standard)	B	B	B	B	F	F	F	F	F	F	F	F
16 - Barrel	G	G	G	G	G	G	G	G	G	G	G	G
20 - Piston	J	J	J	K	K	K	K	K	K	K	K	K
27 - Cap, Rectangular Flange	E	E	E	E	E	E	E	E	E	E	E	E
27 - Cap, Clevis	E	E	B	E	E	E	E	E	E	E	E	E
27 - Clevis Lugs	E	E	E	E	E	E	E	E	E	E	E	E
27 - Double Rod End Head, Rectangular	E	E	E	E	E	E	E	E	E	*	*	*
27 - Double Rod End Head, Trunnion	*	*	*	*	*	*	*	*	*	*	*	*
29 - Barrel Flange with Thru Holes	B	B	B	B	F	F	F	F	F	F	F	F
30 - Retainer, Rectangular	B	B	B (E option)	B (E option)	B (E option)	B (E option)	*	B (E option)	K	*	*	*

* Material based on application requirements for full pressure loading
Note: Item numbers refer to symbols in Parts Identification drawing and table on page 12.

Table 2 – Cartridge, Retainer and Rod Materials

Item Number and Description	Rod Ø												
	1.000	1.375	1.750	2.000	2.500	3.000	3.500	4.000	4.500	5.000	5.500	7.000	8.000
2 - Cartridge	A	A	A	A	A	A	A	A	A	A	A	A	A
5 - Cartridge Retainer	B	C	C	C	B	C	D	C	E	E	E	E	F
17, 28 - Piston Rods	L1	L1	L1	L1	L1	L1	L1	L1	L2	L2	L2	L3	L3

Note: Item numbers refer to symbols in Parts Identification drawing and table on page 12.

Table 3 – Material Key

A	Bearing Bronze
B	Cold Rolled Steel
C	DOM Steel Tubing
D	Seamless Carbon and Alloy Steel Tubing
E	Carbon Structural Steel
F	Alloy Steel
G	Carbon and Alloy Steel Tubing
J	Ductile Iron
K	Alloy Steel
L1	AISI C1045/1050, Chrome Plated
L2	AISI C1045/1050, Chrome Plated
L3	AISI C1045/1050, Chrome Plated

View Table of Contents

Torque Values and Service Kits

Table 1 – Head and Cap Mounting Screw Torque Values

Bore Ø	Torque (FT-LBS ± 10%)
1.50	30
2.00	50
2.50	75
3.25	140
4.00	210
5.00	420
6.00	610
7.00	960
8.00	1275
10.00	560
12.00	940
14.00	1300

Table 2 – Cartridge (Packing Cap) Screw Torque Values

Screw Size	Torque (IN-LBS ± 10%)
1/4"-20	120
5/16"-18	215
3/8"-16	420

Table 4 – Piston Seal Kits

Bore Ø	Fatigue Piston Seal Kit	Static Piston Seal Kit	Universal Piston Seal Kit[1]
1.50	10023204	10023203	10023205
2.00	10023155	10023144	10023166
2.50	10024225	10023145	10023167
3.25	10023157	10023146	10023168
4.00	10023158	10023147	10023169
5.00	10023159	10023148	10023170
6.00	10023160	10023149	10023171
7.00	10023161	10023150	10023172
8.00	10023162	10023151	10023173
10.00	10023163	10023152	10023174
12.00	10023164	10023153	10023175
14.00	10023165	10023154	10023176
	Items 21, 22, 24, 25, 26	Items 23 - 26	Items 21 - 26

Note: Items 18 and 19 are not included in any seal kits since the piston and rod do not need to be disassembled to replace OD piston seals.

[1] Contains both Fatigue and Static piston seals

Table 3 – Rod Seal and Cartridge Kits

Rod Ø	Standard Rod Seal Kit		Standard Cartridge Kit		Low Friction Rod Seal Kit	Low Friction Cartridge Kit
	without Gland Drain	with Gland Drain option	without Gland Drain	with Gland Drain option		
1.000	10023177	10023436	10023190	10023449	BB302086A50	BB302086A51
1.375	10023178	10023437	10023191	10023450	BB300752E50	BB300752E51
1.750	10023179	10023438	10023192	10023451	BB300752C50	BB300752C51
2.000	10023180	10023439	10023193	10023452	BB300752D50	BB300752D51
2.500	10023181	10023440	10023194	10023453	BB302046A50	BB302046A51
3.000	10023182	10023441	10023195	10023454	BB300752A50	BB300752A51
3.500	10023183	10023442	10023196	10023455	BB300752B50	BB300752B51
4.000	10023184	10023443	10023197	10023456	BB300752F50	BB300752F51
4.500	10023185	10023444	10023198	10023457	BB300752G50	BB300752G51
5.000	10023186	10023445	10023199	10023458	BB300752H50	BB300752H51
5.500	10023187	10023446	10023200	10023459	BB300752I50	BB300752I51
7.000	10023188	10023447	10023201	10023460	Consult Factory	
8.000	10023189	10023448	10023202	10023461		
	Items 1, 9, 11, 12, 13	Items 1, 4, 8, 9, 11, 12, 13	Items 1, 2, 9, 10, 11, 12, 13	Items 1, 2, 4, 8, 9, 10, 11, 12, 13	Items 1, 9, 11, 12, 13	Items 1, 2, 9, 10, 11, 12, 13

Note: In order to repair Double Rod End cylinders, 2 rod seal kits or 2 cartridge kits will be required

View Table of Contents

Safety Guide for Selecting and Using Hydraulic, Pneumatic Cylinders and Their Accessories

WARNING: ⚠ FAILURE OF THE CYLINDER, ITS PARTS, ITS MOUNTING, ITS CONNECTIONS TO OTHER OBJECTS, OR ITS CONTROLS CAN RESULT IN:

- **Unanticipated or uncontrolled movement of the cylinder or objects connected to it.**
- **Falling of the cylinder or objects held up by it.**
- **Fluid escaping from the cylinder, potentially at high velocity.**

THESE EVENTS COULD CAUSE DEATH OR PERSONAL INJURY BY, FOR EXAMPLE, PERSONS FALLING FROM HIGH LOCATIONS, BEING CRUSHED OR STRUCK BY HEAVY OR FAST MOVING OBJECTS, BEING PUSHED INTO DANGEROUS EQUIPMENT OR SITUATIONS, OR SLIPPING ON ESCAPED FLUID.

Before selecting or using Parker Hannifin Corporation (the Company) cylinders or related accessories, it is important that you read, understand and follow the following safety information. Training is advised before selecting and using the Company's products.

1.0 General Instructions

1.1 Scope – This safety guide provides instructions for selecting and using (including assembling, installing, and maintaining) cylinder products. This safety guide is a supplement to and is to be used with the specific Company publications for the specific cylinder products that are being considered for use.

1.2 Fail Safe – Cylinder products can and do fail without warning for many reasons. All systems and equipment should be designed in a fail-safe mode so that if the failure of a cylinder product occurs people and property won't be endangered.

1.3 Distribution – Provide a free copy of this safety guide to each person responsible for selecting or using cylinder products. Do not select or use the Company's cylinders without thoroughly reading and understanding this safety guide as well as the specific Company publications for the products considered or selected.

1.4 User Responsibility – Due to very wide variety of cylinder applications and cylinder operating conditions, the Company does not warrant that any particular cylinder is suitable for any specific application. This safety guide does not analyze all technical parameters that must be considered in selecting a product. The hydraulic and pneumatic cylinders outlined in this catalog are designed to the Company's design guidelines and do not necessarily meet the design guideline of other agencies such as American Bureau of Shipping, ASME Pressure Vessel Code etc. The user, through its own analysis and testing, is solely responsible for:

- Making the final selection of the cylinders and related accessories.
- Determining if the cylinders are required to meet specific design requirements as required by the Agency(s) or industry standards covering the design of the user's equipment.
- Assuring that the user's requirements are met, OSHA requirements are met, and safety guidelines from the applicable agencies such as but not limited to ANSI are followed and that the use presents no health or safety hazards.
- Providing all appropriate health and safety warnings on the equipment on which the cylinders are used.

1.5 Additional Questions – Call the appropriate Company technical service department if you have any questions or require any additional information. See the Company publication for the product being considered or used, or call 1-847-298-2400, or go to www.parker.com, for telephone numbers of the appropriate technical service department.

2.0 Cylinder and Accessories Selection

2.1 Seals – Part of the process of selecting a cylinder is the selection of seal compounds. Before making this selection, consult the "seal information page(s)" of the publication for the series of cylinders of interest.

The application of cylinders may allow fluids such as cutting fluids, wash down fluids etc. to come in contact with the external area of the cylinder. These fluids may attack the piston rod wiper and or the primary seal and must be taken into account when selecting and specifying seal compounds.

Dynamic seals will wear. The rate of wear will depend on many operating factors. Wear can be rapid if a cylinder is mis-aligned or if the cylinder has been improperly serviced. The user must take seal wear into consideration in the application of cylinders.

2.2 Piston Rods – Possible consequences of piston rod failure or separation of the piston rod from the piston include, but are not limited to are:

- Piston rod and or attached load thrown off at high speed.
- High velocity fluid discharge.
- Piston rod extending when pressure is applied in the piston retract mode.

Piston rods or machine members attached to the piston rod may move suddenly and without warning as a consequence of other conditions occurring to the machine such as, but not limited to:

- Unexpected detachment of the machine member from the piston rod.
- Failure of the pressurized fluid delivery system (hoses, fittings, valves, pumps, compressors) which maintain cylinder position.
- Catastrophic cylinder seal failure leading to sudden loss of pressurized fluid.
- Failure of the machine control system.

Follow the recommendations of the "Piston Rod Selection Chart and Data" in the publication for the series of cylinders of interest. The suggested piston rod diameter in these charts must be followed in order to avoid piston rod buckling.

Piston rods are not normally designed to absorb bending moments or loads which are perpendicular to the axis of piston rod motion. These additional loads can cause the piston rod to fail. If these types of additional loads are expected to be imposed on the piston rod, their magnitude should be made known to our engineering department.

The cylinder user should always make sure that the piston rod is securely attached to the machine member.

On occasion cylinders are ordered with double rods (a piston rod extended from both ends of the cylinder). In some cases a stop is threaded on to one of the piston rods and used as an external stroke adjuster. On occasions spacers are attached to the machine member connected to the piston rod and also used as a stroke adjuster. In both cases the stops will create a pinch point and the user should consider appropriate use of guards. If these external stops are not perpendicular to the mating contact surface, or if debris is trapped between the contact surfaces, a bending moment will be placed on the piston rod, which can lead to piston rod failure. An external stop will also negate the effect of cushioning and will subject the piston rod to impact loading. Those two (2) conditions can cause piston rod failure. Internal stroke adjusters are available with and without cushions. The use of external stroke adjusters should be reviewed with our engineering department.

The piston rod to piston and the stud to piston rod threaded connections are secured with an anaerobic adhesive. The strength of the adhesive decreases with increasing temperature. Cylinders which can be exposed to temperatures above +250°F (+121°C) are to be ordered with a non studded piston rod and a pinned piston to rod joint.

2.3 Cushions – Cushions should be considered for cylinder applications when the piston velocity is expected to be over 4 inches/second.

Cylinder cushions are normally designed to absorb the energy of a linear applied load. A rotating mass has considerably more energy than the same mass moving in a linear mode. Cushioning for a rotating mass application should be reviewed by our engineering department.

2.4 Cylinder Mountings – Some cylinder mounting configurations may have certain limitations such as but not limited to minimum stroke for side or foot mounting cylinders or pressure de-ratings for certain mounts. Carefully review the catalog for these types of restrictions.

Always mount cylinders using the largest possible high tensile alloy steel socket head cap screws that can fit in the cylinder mounting holes and torque them to the manufacturer's recommendations for their size.

2.5 Port Fittings – Hydraulic cylinders applied with meter out or deceleration circuits are subject to intensified pressure at piston rod end.

The rod end pressure is approximately equal to:

$$\frac{\text{operating pressure x effective cap end area}}{\text{effective rod end piston area}}$$

Contact your connector supplier for the pressure rating of individual connectors.

3.0 Cylinder and Accessories Installation and Mounting

3.1 Installation

3.1.1 – Cleanliness is an important consideration, and cylinders are shipped with the ports plugged to protect them from contaminants entering the ports. These plugs should not be removed until the piping is to be installed. Before making the connection to the cylinder ports, piping should be thoroughly cleaned to remove all chips or burrs which might have resulted from threading or flaring operations.

View Table of Contents

3.1.2 – Cylinders operating in an environment where air drying materials are present such as fast-drying chemicals, paint, or weld splatter, or other hazardous conditions such as excessive heat, should have shields installed to prevent damage to the piston rod and piston rod seals.

3.1.3 – Proper alignment of the cylinder piston rod and its mating component on the machine should be checked in both the extended and retracted positions. Improper alignment will result in excessive rod gland and/or cylinder bore wear. On fixed mounting cylinders attaching the piston rod while the rod is retracted will help in achieving proper alignment.

3.1.4 – Sometimes it may be necessary to rotate the piston rod in order to thread the piston rod into the machine member. This operation must always be done with zero pressure being applied to either side of the piston. Failure to follow this procedure may result in loosening the piston to rod-threaded connection. In some rare cases the turning of the piston rod may rotate a threaded head and loosen it from the cylinder body. Confirm that this condition is not occurring. If it does, re-tighten the head firmly against the cylinder body.

For double rod cylinders it is also important that when attaching or detaching the piston rod from the machine member that the torque be applied to the piston rod end of the cylinder that is directly attaching to the machine member with the opposite end unrestrained. If the design of the machine is such that only the rod end of the cylinder opposite to where the rod attaches to the machine member can be rotated, consult the factory for further instructions.

3.2 Mounting Recommendations

3.2.1 – Always mount cylinders using the largest possible high tensile alloy steel socket head screws that can fit in the cylinder mounting holes and torque them to the manufacturer's recommendations for their size.

3.2.2 – Side-Mounted Cylinders – In addition to the mounting bolts, cylinders of this type should be equipped with thrust keys or dowel pins located so as to resist the major load.

3.2.3 – Tie Rod Mounting – Cylinders with tie rod mountings are recommended for applications where mounting space is limited. Nuts used for this mounting style should be torqued to the same value as the tie rods for that bore size.

3.2.4 – Flange Mount Cylinders – The controlled diameter of the rod gland extension on head end flange mount cylinders can be used as a pilot to locate the cylinders in relation to the machine. After alignment has been obtained, the flanges may be drilled for pins or dowels to prevent shifting.

3.2.5 – Trunnion Mountings – Cylinders require lubricated bearing blocks with minimum bearing clearances. Bearing blocks should be carefully aligned and rigidly mounted so the trunnions will not be subjected to bending moments. The rod end should also be pivoted with the pivot pin in line and parallel to axis of the trunnion pins.

3.2.6 – Clevis Mountings – Cylinders should be pivoted at both ends with centerline of pins parallel to each other. After cylinder is mounted, be sure to check to assure that the cylinder is free to swing through its working arc without interference from other machine parts.

4.0 Cylinder and Accessories Maintenance, Troubleshooting and Replacement

4.1 Storage – At times cylinders are delivered before a customer is ready to install them and must be stored for a period of time. When storage is required the following procedures are recommended.

4.1.1 – Store the cylinders in an indoor area which has a dry, clean and noncorrosive atmosphere. Take care to protect the cylinder from both internal corrosion and external damage.

4.1.2 – Whenever possible cylinders should be stored in a vertical position (piston rod up). This will minimize corrosion due to possible condensation which could occur inside the cylinder. This will also minimize seal damage.

4.1.3 – Port protector plugs should be left in the cylinder until the time of installation.

4.1.4 – If a cylinder is stored full of hydraulic fluid, expansion of the fluid due to temperature changes must be considered. Installing a check valve with free flow out of the cylinder is one method.

4.1.5 – When cylinders are mounted on equipment that is stored outside for extended periods, exposed unpainted surfaces, e.g. piston rod, must be coated with a rust-inhibiting compound to prevent corrosion.

4.2 Cylinder Trouble Shooting

4.2.1 – External Leakage

4.2.1.1 – Rod seal leakage can generally be traced to worn or damaged seals. Examine the piston rod for dents, gouges or score marks, and replace piston rod if surface is rough.

Rod seal leakage could also be traced to bearing wear. If clearance is excessive, replace rod bearing and seal. Rod seal leakage can also be traced to seal deterioration. If seals are soft or gummy or brittle, check compatibility of seal material with lubricant used if air cylinder, or operating fluid if hydraulic cylinder. Replace with seal material, which is compatible with these fluids. If the seals are hard or have lost elasticity, it is usually due to exposure to temperatures in excess of 165°F. (+74°C). Shield the cylinder from the heat source to limit temperature to 350°F. (+177°C.) and replace with fluorocarbon seals.

4.2.1.2 – Cylinder body seal leak can generally be traced to a loose head. Torque the head to manufacturer's recommendation for that bore size.

Excessive pressure can also result in cylinder body seal leak. Determine maximum pressure to rated limits. Replace seals and retorque head as in paragraph above. Excessive pressure can also result in cylinder body seal leak. Determine if the pressure rating of the cylinder has been exceeded. If so, bring the operating pressure down to the rating of the cylinder and have the head replaced.

Pinched or extruded cylinder body seal will also result in a leak. Replace cylinder body seal and retorque as in paragraph above.

Cylinder body seal leakage due to loss of radial squeeze which shows up in the form of flat spots or due to wear on the O.D. or I.D. – Either of these are symptoms of normal wear due to high cycle rate or length of service. Replace seals as per paragraph above.

4.2.2 – Internal Leakage

4.2.2.1 – Piston seal leak (by-pass) 1 to 3 cubic inches per minute leakage is considered normal for piston ring construction. Virtually no static leak with lipseal type seals on piston should be expected. Piston seal wear is a usual cause of piston seal leakage. Replace seals as required.

4.2.2.2 – With lipseal type piston seals excessive back pressure due to over-adjustment of speed control valves could be a direct cause of rapid seal wear. Contamination in a hydraulic system can result in a scored cylinder bore, resulting in rapid seal wear. In either case, replace piston seals as required.

4.2.2.3 – What appears to be piston seal leak, evidenced by the fact that the cylinder drifts, is not always traceable to the piston. To make sure, it is suggested that one side of the cylinder piston be pressurized and the fluid line at the opposite port be disconnected. Observe leakage. If none is evident, seek the cause of cylinder drift in other component parts in the circuit.

4.2.3 – Cylinder Fails to Move the Load

4.2.3.1 – Pneumatic or hydraulic pressure is too low. Check the pressure at the cylinder to make sure it is to circuit requirements.

4.2.3.2 – Piston Seal Leak – Operate the valve to cycle the cylinder and observe fluid flow at valve exhaust ports at end of cylinder stroke. Replace piston seals if flow is excessive.

4.2.3.3 – Cylinder is undersized for the load – Replace cylinder with one of a larger bore size.

4.3 Erratic or Chatter Operation

4.3.1 – Excessive friction at rod bearing or piston bearing due to load misalignment – Correct cylinder-to-load alignment.

4.3.2 – Cylinder sized too close to load requirements – Reduce load or install larger cylinder.

4.3.3 – Erratic operation could be traced to the difference between static and kinetic friction. Install speed control valves to provide a back pressure to control the stroke.

4.4 Cylinder Modifications, Repairs, or Failed Component – Cylinders as shipped from the factory are not to be disassembled and or modified. If cylinders require modifications, these modifications must be done at company locations or by the Company's certified facilities. The Cylinder Division Engineering Department must be notified in the event of a mechanical fracture or permanent deformation of any cylinder component (excluding seals). This includes a broken piston rod, head, mounting accessory or any other cylinder component. The notification should include all operation and application details. This information will be used to provide an engineered repair that will prevent recurrence of the failure.

It is allowed to disassemble cylinders for the purpose of replacing seals or seal assemblies. However, this work must be done by strictly following all the instructions provided with the seal kits.

View Table of Contents

Offer of Sale

The items described in this document and other documents and descriptions provided by Parker Hannifin Corporation, its subsidiaries and its authorized distributors ("Seller") are hereby offered for sale at prices to be established by Seller. This offer and its acceptance by any customer ("Buyer") shall be governed by all of the following Terms and Conditions. Buyer's order for any item described in its document, when communicated to Seller verbally, or in writing, shall constitute acceptance of this offer. All goods, services or work described will be referred to as "Products".

1. Terms and Conditions. Seller's willingness to offer Products, or accept an order for Products, to or from Buyer is subject to these Terms and Conditions or any newer version of the terms and conditions found on-line at www.parker.com/saleterms/. Seller objects to any contrary or additional terms or conditions of Buyer's order or any other document issued by Buyer.

2. Price Adjustments; Payments. Prices stated on Seller's quote or other documentation offered by Seller are valid for 30 days, and do not include any sales, use, or other taxes unless specifically stated. Unless otherwise specified by Seller, all prices are F.C.A. Seller's facility (INCOTERMS 2010). Payment is subject to credit approval and is due 30 days from the date of invoice or such other term as required by Seller's Credit Department, after which Buyer shall pay interest on any unpaid invoices at the rate of 1.5% per month or the maximum allowable rate under applicable law.

3. Delivery Dates; Title and Risk; Shipment. All delivery dates are approximate and Seller shall not be responsible for any damages resulting from any delay. Regardless of the manner of shipment, title to any products and risk of loss or damage shall pass to Buyer upon placement of the products with the shipment carrier at Seller's facility. Unless otherwise stated, Seller may exercise its judgment in choosing the carrier and means of delivery. No deferment of shipment at Buyers' request beyond the respective dates indicated will be made except on terms that will indemnify, defend and hold Seller harmless against all loss and additional expense. Buyer shall be responsible for any additional shipping charges incurred by Seller due to Buyer's acts or omissions.

4. Warranty. Seller warrants that the Products sold hereunder shall be free from defects in material or workmanship for a period of eighteen months from the date of delivery to Buyer. The prices charged for Seller's products are based upon the exclusive limited warranty stated above, and upon the following disclaimer: **DISCLAIMER OF WARRANTY: THIS WARRANTY COMPRISES THE SOLE AND ENTIRE WARRANTY PERTAINING TO PRODUCTS PROVIDED HEREUNDER. SELLER DISCLAIMS ALL OTHER WARRANTIES, EXPRESS AND IMPLIED, INCLUDING DESIGN, MERCHANTABILITY AND FITNESS FOR A PARTICULAR PURPOSE.**

5. Claims; Commencement of Actions. Buyer shall promptly inspect all Products upon delivery. No claims for shortages will be allowed unless reported to the Seller within 10 days of delivery. No other claims against Seller will be allowed unless asserted in writing within 30 days after delivery. Buyer shall notify Seller of any alleged breach of warranty within 30 days after the date the defect is or should have been discovered by Buyer. Any action based upon breach of this agreement or upon any other claim arising out of this sale (other than an action by Seller for an amount due on any invoice) must be commenced within 12 months from the date of the breach without regard to the date breach is discovered.

6. LIMITATION OF LIABILITY. UPON NOTIFICATION, SELLER WILL, AT ITS OPTION, REPAIR OR REPLACE A DEFECTIVE PRODUCT, OR REFUND THE PURCHASE PRICE. **IN NO EVENT SHALL SELLER BE LIABLE TO BUYER FOR ANY SPECIAL, INDIRECT, INCIDENTAL OR CONSEQUENTIAL DAMAGES ARISING OUT OF, OR AS THE RESULT OF, THE SALE, DELIVERY, NON-DELIVERY, SERVICING, USE OR LOSS OF USE OF THE PRODUCTS OR ANY PART THEREOF, OR FOR ANY CHARGES OR EXPENSES OF ANY NATURE INCURRED WITHOUT SELLER'S WRITTEN CONSENT, EVEN IF SELLER HAS BEEN NEGLIGENT, WHETHER IN CONTRACT, TORT OR OTHER LEGAL THEORY. IN NO EVENT SHALL SELLER'S LIABILITY UNDER ANY CLAIM MADE BY BUYER EXCEED THE PURCHASE PRICE OF THE PRODUCTS.**

7. User Responsibility. The user, through its own analysis and testing, is solely responsible for making the final selection of the system and Product and assuring that all performance, endurance, maintenance, safety and warning requirements of the application are met. The user must analyze all aspects of the application and follow applicable industry standards and Product information. If Seller provides Product or system options, the user is responsible for determining that such data and specifications are suitable and sufficient for all applications and reasonably foreseeable uses of the Products or systems.

8. Loss to Buyer's Property. Any designs, tools, patterns, materials, drawings, confidential information or equipment furnished by Buyer or any other items which become Buyer's property, will be considered obsolete and may be destroyed by Seller after two consecutive years have elapsed without Buyer ordering the items manufactured using such property. Seller shall not be responsible for any loss or damage to such property while it is in Seller's possession or control.

9. Special Tooling. A tooling charge may be imposed for any special tooling, including without limitation, dies, fixtures, molds and patterns, acquired to manufacture Products. Such special tooling shall be and remain Seller's property notwithstanding payment of any charges by Buyer. In no event will Buyer acquire any interest in apparatus belonging to Seller which is utilized in the manufacture of the Products, even if such apparatus has been specially converted or adapted for such manufacture and notwithstanding any charges paid by Buyer. Unless otherwise agreed, Seller shall have the right to alter, discard or otherwise dispose of any special tooling or other property in its sole discretion at any time.

10. Buyer's Obligation; Rights of Seller. To secure payment of all sums due or otherwise, Seller shall retain a security interest in the goods delivered and this agreement shall be deemed a Security Agreement under the Uniform Commercial Code. Buyer authorizes Seller as its attorney to execute and file on Buyer's behalf all documents Seller deems necessary to perfect its security interest.

11. Improper use and Indemnity. Buyer shall indemnify, defend, and hold Seller harmless from any claim, liability, damages, lawsuits, and costs (including attorney fees), whether for personal injury, property damage, patent, trademark or copyright infringement or any other claim, brought by or incurred by Buyer, Buyer's employees, or any other person, arising out of: (a) improper selection, improper application or other misuse of Products purchased by Buyer from Seller; (b) any act or omission, negligent or otherwise, of Buyer; (c) Seller's use of patterns, plans, drawings, or specifications furnished by Buyer to manufacture Product; or (d) Buyer's failure to comply with these terms and conditions. Seller shall not indemnify Buyer under any circumstance except as otherwise provided.

12. Cancellations and Changes. Orders shall not be subject to cancellation or change by Buyer for any reason, except with Seller's written consent and upon terms that will indemnify, defend and hold Seller harmless against all direct, incidental and consequential loss or damage. Seller may change product features, specifications, designs and availability with notice to Buyer.

13. Limitation on Assignment. Buyer may not assign its rights or obligations under this agreement without the prior written consent of Seller.

14. Force Majeure. Seller does not assume the risk and shall not be liable for delay or failure to perform any of Seller's obligations by reason of circumstances beyond the reasonable control of Seller (hereinafter "Events of Force Majeure"). Events of Force Majeure shall include without limitation: accidents, strikes or labor disputes, acts of any government or government agency, acts of nature, delays or failures in delivery from carriers or suppliers, shortages of materials, or any other cause beyond Seller's reasonable control.

15. Waiver and Severability. Failure to enforce any provision of this agreement will not waive that provision nor will any such failure prejudice Seller's right to enforce that provision in the future. Invalidation of any provision of this agreement by legislation or other rule of law shall not invalidate any other provision herein. The remaining provisions of this agreement will remain in full force and effect.

16. Termination. Seller may terminate this agreement for any reason and at any time by giving Buyer thirty (30) days written notice of termination. Seller may immediately terminate this agreement, in writing, if Buyer: (a) commits a breach of any provision of this agreement (b) appointments a trustee, receiver or custodian for all or any part of Buyer's property (c) files a petition for relief in bankruptcy on its own behalf, or by a third party (d) makes an assignment for the benefit of creditors, or (e) dissolves or liquidates all or a majority of its assets.

17. Governing Law. This agreement and the sale and delivery of all Products hereunder shall be deemed to have taken place in and shall be governed and construed in accordance with the laws of the State of Ohio, as applicable to contracts executed and wholly performed therein and without regard to conflicts of laws principles. Buyer irrevocably agrees and consents to the exclusive jurisdiction and venue of the courts of Cuyahoga County, Ohio with respect to any dispute, controversy or claim arising out of or relating to this agreement.

18. Indemnity for Infringement of Intellectual Property Rights. Seller shall have no liability for infringement of any patents, trademarks, copyrights, trade dress, trade secrets or similar rights except as provided in this Section. Seller will defend and indemnify Buyer against allegations of infringement of U.S. patents, U.S. trademarks, copyrights, trade dress and trade secrets ("Intellectual Property Rights"). Seller will defend at its expense and will pay the cost of any settlement or damages awarded in an action brought against Buyer based on an allegation that a Product sold pursuant to this Agreement infringes the Intellectual Property Rights of a third party. Seller's obligation to defend and indemnify Buyer is contingent on Buyer notifying Seller within ten (10) days after Buyer becomes aware of such allegations of infringement, and Seller having sole control over the defense of any allegations or actions including all negotiations for settlement or compromise. If a Product is subject to a claim that it infringes the Intellectual Property Rights of a third party, Seller may, at its sole expense and option, procure for Buyer the right to continue using the Product, replace or modify the Product so as to make it noninfringing, or offer to accept return of the Product and return the purchase price less a reasonable allowance for depreciation. Notwithstanding the foregoing, Seller shall have no liability for claims of infringement based on information provided by Buyer, or directed to Products delivered hereunder for which the designs are specified in whole or part by Buyer, or infringements resulting from the modification, combination or use in a system of any Product sold hereunder. The foregoing provisions of this Section shall constitute Seller's sole and exclusive liability and Buyer's sole and exclusive remedy for infringement of Intellectual Property Rights.

19. Entire Agreement. This agreement contains the entire agreement between the Buyer and Seller and constitutes the final, complete and exclusive expression of the terms of sale. All prior or contemporaneous written or oral agreements or negotiations with respect to the subject matter are herein merged.

20. Compliance with Law, U. K. Bribery Act and U.S. Foreign Corrupt Practices Act. Buyer agrees to comply with all applicable laws and regulations, including both those of the United Kingdom and the United States of America, and of the country or countries of the Territory in which Buyer may operate, including without limitation the U. K. Bribery Act, the U.S. Foreign Corrupt Practices Act ("FCPA") and the U.S. Anti-Kickback Act (the "Anti-Kickback Act"), and agrees to indemnify and hold harmless Seller from the consequences of any violation of such provisions by Buyer, its employees or agents. Buyer acknowledges that they are familiar with the provisions of the U. K. Bribery Act, the FCPA and the Anti-Kickback Act, and certifies that Buyer will adhere to the requirements thereof. In particular, Buyer represents and agrees that Buyer shall not make any payment or give anything of value, directly or indirectly to any governmental official, any foreign political party or official thereof, any candidate for foreign political office, or any commercial entity or person, for the purpose of influencing such person to purchase products or otherwise benefit the business of Seller.

View Table of Contents

12/15 / Catalog HY08-1330-1/NA

Parker Hannifin Corporation
Cylinder Division
500 South Wolf Road
Des Plaines, IL 60016
phone (847) 298-2400
fax (800) 892-1008
www.parker.com/cylinder